THOMSON MULTI MEDIA

TV

Brandt FERGUSON SABA TELEFUNKEN THOMSON

PARTS LIST
LISTE PIECES DETACHEES
ERSATZTEILLISTE
LISTA PARTI DI RICAMBIO
LISTA DE PIEZAS DE REPUESTO

TELEFUNKEN
RP744E
Chassis ICC19

MODULES

MAIN	IC19B5KA08P004		
AMVD	AM/VD19000	R	10546730
AMVD	SUBAMVD19100		10546720
CRT	CRTRP19 B	R	10529410
CRT	CRTRP19 G	R	10546590
CRT	CRTRP19 R	R	10284380
DCU	DCURP19	R	10468670
DVT	DVT19510	R	10611170
EMB	EMB19500	R	10600840
FCB	FCBRP19	R	10525880
KB	KBRP19	R	10526190
PS	PSRP19	R	10527240
RGB	SUB RGB-PIRP19		10644830
RIR	IRRP19	R	10526120
SCI	SCI19004	R	10581460
VM	VM19100	R	10353940

IA001	TDA7269		10348790
IA002	TDA7298		10348810
IA010,IB012, IG011,IL062	TL082CD FLAT		10364130
IF001	TDA8177F		10352880
II050	TDA9811/V3		10336130
IK001	STV2040		10379540
IK002,003, IP002	TL084/CP		46021200
IK004,IP130	MC7812/CT		46007600
IK005	MC7805/CT		46025200
IK006	L7912CV		15054150
IK007	M24C32BN1		10462210
IK008,015	X24164		10068250
IP050,IX001	MC7809/CT		70401402
IP060	TEA2261		90542470
IP140	TDA8139		10044580
IP250	K324PG(CNY75GA)	⚠	10536210
IR001[a]	ST90R92		10441970
IR001[b]	TFMK1330T		10132410
IR003	M24C64-BN1		10533930
IR004	MC14094BD/HEF4094BT/ BU4094BF FLAT		20016020
IR020	C19 M27C160-120F1 V6.01-1		10652940
IR030	GM76G256AL-FW70 FLAT		10271860
IR040	74F02 FLAT		10529250
IS001,060	MC4558CD IC SMD		10276220
IS010	MC78L08ACP		10308410
IS100	MSP8410D-B4 (DIE)		10546420
IS200	DPL3519 (DIE)		10546430
IT001	SDA5275-2S		10449670
IT002	HYB514400BJ-80		10359750
IV001[d]	STV2165		10360480
IV001[a]	STV2162 CUT2.2		10529490
IV304	LM358D FLAT		10258670
IV308	DMUO-UP		10325580
IV309	TMS4C2972DT		10458130
IV601	TDA9143S1		10516090
IV602	TDA4665T FLAT		10155740
IX900	TEA6415C		15081290
ZL041	MP160	⚠	10457130
ZV301	MP40	⚠	10469170

TA001[a],TI030, TP150,166,190, TT002,008,009, 010,TV001[d],003[d], 051,063,071, 073,083,300, 600,801,803, 821,841,TY004	BC856B SMD		16006310
TA001[c],002[c], 052,054,TB001, 002,052,054, TG001,002,052, 052,054	BDW93CFI		10599300
TA002[a],006,050, TB006,050, TG006,050, TI031,032,070, TL001,062,063, TP026,027,152, 161,162,167, 170,175,TR002, 102,105,TT001, 003,006,007, 011,012,TV002, 301,302,321, 322,601,802, 822,823,842, 843,TX955,960, 965,TY001,002[d], 003,005	BC846B SMD		16006260
TA003,004,053, 055,TB003,004, 053,055,TG003, 004,053	BDW94CFI		10599200
TA005,051, TB005,051, TG005,051, TK106,206,306, TV002	BF420		16003080
TI010,033,034, 040,045,050, TP145,TR091, 095,106,TT004	BCR141 SMD		16006890
TI020	BF799 SMD		35031670
TK001[c],003,005, 009,027,101, 132,201,232, 301,332,TS001, 002,TV006,007, 008,011,019, 020,TX620,622, 650,652	BC857B SMD		30946660
TK001[e]	BC548B		16000930
TK002,004,020, 022,023,024, 028,130,230, 330,TM104,109, 110,204,209, 210,304,309, 310,TP001, TS003,004, TV001[c],003[c],004, 005,014,TX621, 651,830,831, 832,833	BC847B SMD		11070770
TK102,104,202, 204,302,304	BF883S		10162190
TK103,105,203, 205,303,305	BF872		10162200

xxxx[a] : MAIN **xxxx[b] : RIR** **xxxx[c] : DCU** **xxxx[d] : VM** **xxxx[e] : KB**

R : RECYCLED PART
: PIECE RECYCLEE
: AUSTAUSCHTEILE
: RICAMBIO RICICLATO
: MODULO REPROCESADO

For any requests, please contact THOMSON multimedia after sales service area
Pour toutes précisions, contactez votre service apres vente local THOMSON multimedia
Für weitere Auskünfte, wenden Sie sich bitte an die THOMSON multimedia Kundendienste
Per precisazioni, contattare l'assistenza tecnica THOMSON multimedia
Para cualquier pregunta, por favor contactar con el responsable de zona del servicio postventa de THOMSON multimedia

06/99 35088420
REV. N° 0 00/00 00000000

No copying, translation, modification on other use authorized. All rights reserved worldwide. • Tous droits de reproduction, de traduction, d'adaptation et d'exécution réservés pour tous les pays. • Sämtliche Urheberrechte an diesen Texten und Zeichnungen stehen uns zu. Nachdrucke, Vervielfältigungen - auch auszugsweise - nur mit unserer vorherigen Zustimmung zulässig. Alle Rechte vorbehalten. • I diritti di riproduzione, di traduzione, e esecuzione sono riservati per tutti i paesi. • Derechos de reproduccion, de traduccion, de adaptacion y de ejecucion reservados para todos los paises.

TK107,207,307, **TM**101,108,201, 208,301,308, **TP**270	BC557B	16001060
TL004	MPSW01A	70436520
TL005	MPS750	16001340
TL028,**TV**002[a]	TIP122FP	25358380
TL030	ON4977/BU2525AX	10461310
TM006	2SA1837	16001500
TM007	2SC4793	16001600
TM102,202,302	BC337-40	45001466
TM105,205,305, **TP**238	BC547B	16000890
TP025	600V 1A25	10353960
TP060	BUL810TH	10224370
TP146	BD241C	16001880
TP220	2SK1460	15046790
TP222	BC327	16000430
TP223,224,271	BC547C	16000900
TR048	BCR185 SMD	16006900
TV010	2SC3675	16004070
TV108	BC327-40	16000450
TV303	BF660 SMD	16005830
TV304,308	BC858B SMD	16006330
TV305,307	BF550 SMD	16005780
TV306	BF799 SMD	16005860
TX505	BC848B SMD	35030590
TX910,920,950	BC546B	45001866

DA001[c],002[c], 003,010,011,050, 051,052,059, 060,**DB**001,002, 003,010,011, 050,051,052, 059,060,**DF**001, **DG**001,002,003, 010,011,050, 051,052,060, **DK**001[e],002,003, 004,007[e],013, **DL**092,**DP**027, 061,218,219, 223,224,226, 227,231,232, 237,238,239, 268,**DR**091, **DS**001,002,003, **DV**002,003,004, 007,008,009, 010,011[c],014, 015,020,027[c], 028,029	1N4148	44009209
DA001[a],**DF**002, 028,**DK**005[c], 006[c],007[c],008, 102,106,107,201, 202,206,207, 302,306,307, **DL**070,072, **DM**101,102,105, 106,107,201, 202,205,206, 207,301,302, 305,306,307, **DP**051,060,151, 152,160,175, 178,179,190, **DR**030,031,090, **DT**001,002,003, 004,005,006, 007[a],008[a],009, 010,**DV**025,026, 027,028,038, 039,**RV**052	LL4148 SMD	16012450
DA002[a], DV011[a],012	LL42 SMD	16012530
DA005,006,053, 058,**DB**005,006, 053,058,**DF**031, 033,**DG**005,006, 053,**DK**001[c],002[c], 010,011,012, **DL**001,051,052, **DM**110,111,210, 211,310,311, **DP**050,**DV**005, 006,031,032, 033	RGP10G	10459090
DA008,009,056, 057,**DB**008,009, 056,057,**DG**008, 009,056,**DV**017	BZX55C6V2	20475410
DF007	ZMM15 SMD	16030060
DF011	BZW04-48	10351880
DH001	ZMM33	10376460
DI001,002,040, 041,051,070, 071	BA782S	20542050
DK005[e]	BZX55C5V6/ZPD5V6	44025401
DK006[e],**PE**231	MV6461 LED	20125850
DK009	MA2062-A 6V	20707320
DK103,104,113, 203,204,213, 303,304,313	EGP10G	10542140
DK105,205,305	1N4007GP	10455230
DK108,208,308	BZT03/D150	70402351
DL030	DTV32F-1500	10452490
DL032	BYR29F-600	10569340
DL034,036	EGP10D	20953640
DL041,**DP**140	BYW29-150	16009140
DL043	RGP10M	10455320
DL046	RGP15-20	10340890
DL050	BZX85C22	11072690
DL057,**DS**061, 062,**DV**104,108, **DX**120,151,220, 251,301,351	BAV103 SMD	10155030
DL060	ZMM3,3	16030170
DL066	BZX55B47	11073450
DL071	BZX55C20	30948810
DP022,113	FUF4005/MUR160	16009580
DP039,040	RGP02-20	10472330
DP041	BAT42	16007410
DP052,133,134	1N4001	16008160
DP053,261,263	RGP15G	10272800
DP108,109	RGP30D	10455370
DP110A,110B	RGP50M	10298160
DP112	MUR1100E	10360280
DP130	MUR420	16009630
DP201	GBU4M	10474680
DP213	BZX55C33	11073690
DP225	ZPD4,7/BZX55C4V7	20475400
DP233,234,236, 240,243	BA159	16008120
DP235	BZX55C18	11073680
DP265,267	S410D	10527250
DR104	BZX55B9V1	70438220
DV001	ZMM2,7 SMD	16030100
DV018,019	BYD43-20	10301970
DV101	ZMM6,8 SMD	70439940
DV301,305,309	BB729S SMD	20542090
DV303,304, **LV**320	BA582 SMD	16012130
DV623	BZX84C5V1 SMD	16030330
DX810	BZX55B8V2	40441820
DX814	BZX55B5V1/ZPD5V1 2%	44035702

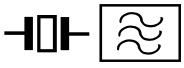

FI010	OFWK3954M FOS	10357610
FI015	OFWG3970M FOS	10512420
FI020	OFWK9453M FOS	10176450
QI053	6M0HZ	48042300
QI070	6M5HZ	20356510
QR001	27M0HZ	10254120
QS040	18M432HZ	10334670
QT001	20M48HZ	10495020
QV601	4M433619HZ	10397980
QV602	3M579545HZ	10087720

FI001	40M4HZ	20300950
FI002	38M9HZ	10319260
FI030	77M8HZ	10348570
FI040	6M6HZ	10437980
FK130,230,330	100NS	10203890
LV312,315	7M96HZ	10519360
LV318	7M96HZ	10519350
LV331	7M96HZ	10519340

PI030,035	2K2 OHM	10308240
PI050	22K0 OHM	10272680
PP267	100R0 OHM	10260330
PS001	1M0 OHM	42045200
PV003,004	1K OHM	42032100
PV101,201,301	2M2 OHM	10174000

JP310	1K0 OHM 1% 0,25W	15012570
RA001,**RB**001, **RG**001,**RK**057, **RP**003,004,007, 008,011,022[c]	10K0 OHM 1% 0,40W	15010340
RA003,051, **RB**003,051, **RG**003,051	332R0 OHM 1% 0,40W	41289309
RA005,053, **RB**005,053, **RG**005,053	162R0 OHM 1% 0,40W	15011850
RA007,060, **RB**007,060, **RG**007,060	8K87 OHM 1% 0,40W	15021900
RA009,057, **RB**009,057, **RG**009,057	1R8 OHM 1% 1W	13085450
RA012,014[c], 058,059,**RB**012, 014,058,059, **RG**012,014,058,059	0R47 OHM 10% 0,40W	⚠ 15022650
RA013[c],055, **RB**013,055, **RG**013,055	267K0 OHM 1% 0,40W	15014920
RA013[a],014[a], 030	4R7 OHM 5% 0,35W	⚠ 10226310
RA020,064, **RB**020,064, **RG**020,064	2K43 OHM 1% 0,40W	15015580
RA061,**RB**061, **RG**061	8K25 OHM 1% 0,40W	15021840
RF011	1R5 OHM 5% 0,50W	⚠ 15022560

RF012	1R0 OHM 1% 0,70W		10254220
RF013	1R21 OHM 1% 0,70W		13010820
RF015	15R0 OHM 265V PTC	⚠	10237730
RF020	270R0 OHM 1% 0,70W		10302230
RK061,065,067, 069	1K0 OHM 1% 0,40W		15012580
RK080	15K0 OHM 1% 0,40W		15011710
RK085	4K75 OHM 1% 0,40W		15018710
RK101,201,301, **RM**117,217,317, **RP**050,**RV**601	10R0 OHM 5% 0,25W	⚠	15009580
RK104,204,304	47R0 OHM 5% 0,70W	⚠	10181910
RK107,207,307	392R0 OHM 1% 0,40W		15017110
RK112,212,312	2K2 OHM 5% 0,50W	⚠	10239310
RK114,116,118, 120,214,216, 218,220,314, 316,318,320	330R0 OHM 5% 0,50W	⚠	10239250
RK117,217,317, **RL**037	330R0 OHM 10% 0,50W		14050190
RK119,219,319	1K0 OHM 5% 0,50W	⚠	10239280
RK123,124,223, 224,323,324	1K5 OHM 5% 0,50W		10121880
RK129,229,329	6K81 OHM 1% 0,40W		15020590
RK228	47K5 OHM 1% 0,40W		13066180
RL013	4R7 OHM 5% 0,50W	⚠	15010040
RL015	1R0 OHM 5% 0,25W	⚠	15009730
RL029	2R2 OHM 5% 0,50W	⚠	10440420
RL040	0R27 OHM 5% 2,50W		10263600
RL043	2R2 OHM 5% 0,70W	⚠	13000480
RL052	54K9 OHM 1% 0,70W		10224320
RL081	68K1 OHM 1% 0,12W		10433880
RL082	59K0 OHM 1% 0,12W		10516830
RM101,201,301	220R0 OHM 5% 0,25W	⚠	15009810
RP001,023	182K0 OHM 1% 0,40W		15012250
RP009,010	3K32 1% 0,40W		41226709
RP012	39K2 OHM 1% 0,40W		15017130
RP015	8K66 OHM 1% 0,40W		15021880
RP016	8K06 OHM 1% 0,40W		15021810
RP017	7K5 OHM 1% 0,40W		15021220
RP018	5K36 OHM 1% 0,40W		15019620
RP020	0R12 OHM 5% 2,50W	⚠	10334390
RP021	10K2 OHM 1% 0,40W		15010370
RP022	100R0 OHM 5% 4,50W		10379830
RP027	15K4 OHM 1% 0,40W		15011730
RP030	100K OHM 1% 0,40W		15010170
RP031	13K0 OHM 1% 0,40W		15011210
RP032,035	22K1 OHM 1% 0,40W		41303301
RP056,057	1K3 OHM 1% 0,40W		15012810
RP066	3K65 OHM 1% 0,40W		13066710
RP100	10M0 OHM 5% 0,70W	⚠	10074320
RP112	1K2 OHM 5% 2W		10134060
RP207	2R7 OHM 5% 4,50W		10379110
RP220,**RV**001	4R7 OHM 5% 2,5W		10471330
RP244	7K15 OHM 1% 0,25W		15021170
RS042	4R7 OHM 5% 0,25W	⚠	35032200
RV041	8R2 OHM 5% 0,25W	⚠	15010150
RV069	150K0 OHM 1% 0,40W		41243301
RX503	15R0 OHM 5% 0,25W	⚠	15009630

CK103,105,107, 203,205,207, 303,305,307	10N0F 10% 400V		15001080
CK117,217,317, **CV**049	1N0F 2K0V		14034870
CK123,223,323	470P0F 10% 3K0V		14006050
CK129,229,329	100N0F 20% 400V		13071240
CL030	1N9F 5% 2K0V	⚠	10559090
CL031	10N0F 3.5% 1K5V		43180300
CL032	20N0F 5% 400V		43388900
CL037	510N0F 5% 250V		10381880
CL038,039	27N0F 5% 250V		50895120
CL041,043	330P0F 20% 1K0V		14035270
CL052	10N0F 5% 400V		14035870
CL146	150P0F 20% 1K0V		30937590
CM148,248,348	470P0F 10% 400V		14002340
CP020	150U0F 385V		43424800
CP022,135,137, 138	470P0F 10% 2K0V		10099390
CP023	2N2F 10% 1K0V		13090980
CP050,053	330P0F 20% 400V		14002220
CP100	1N5F 20% 400V	⚠	10344860
CP101	150P0F 20% 400V	⚠	20738090
CP112	3N3F 5% 630V		10490550
CP201,202	100N0F 20% 275V	⚠	10331520
CP204	1N5F 10% 1K0V		20338740
CP205,206	4N7F 1K0V		10058740
CP209	220U0F 20% 400V		10510680
CP210	22U0F 20% 400V		10114340
CP221	3N3F 20% 1K0V		43324300
CV045,047	4N7F 50% 2K0V		14034420
CV048	820P0F 5% 2K0V		10513370

LL001	DRIVER		10468760
LL008	DSTGDS35	⚠	10521310
LL037	9U0H	⚠	10545340
LP020	SMT57LZ	⚠	10549750
LP070	DRIVER	⚠	60412091
LP201		⚠	10203560
LP250	SMT17	⚠	10534490
LV002			10458460

OTHER PARTS
AUTRES PIECES
SONSTIGE TEILE
ALTRE PARTI
OTRAS PIEZAS

BK101,201,301	CATHODE RAY TUBE SOCKET SUPPORT TUBE CATHODIQUE BILDROEHRENFASSUNG SUPPORTO TUBO CATODICO SOPORTE T.R.C	⚠	10543870
BM010	CINCH SOCKET ASSY PLAQUETTE PRISES CINCH CHINCH BUCHSEN-EINHEIT ASSIEME PRESA CINCH PLAQUETA TOMA CINCH		10487650
BM011	SVHS SOCKET PRISE SVHS S-VHS-BUCHSE PRESA SVHS TOMA SVHS		20392900
BM012	HEADPHONE SOCKET PRISE CASQUE KOPFHOERERBUCHSE PRESA JACK TOMA JACK		20483040
BS004	CINCH SOCKET PRISE CINCH CHINCH-BUCHSE PRESA CINCH TOMA CINCH		10261740
BX100,200,300	SCART SOCKET PRISE PERITEL EURO-AV-BUCHSE EUROPRESA NORMALIZZATA EUROCONECTOR		10402480
FK101,201,301	63MI0A 250V TIME LAG FUSE 63MI0A 250V FUSIBLE 63MI0A 250V SICHERUNG 63MI0A 250V FUSIBILE 63MI0A 250V FUSIBLE	⚠	25336830
FM102,202,302	63MI0A 250V TIME-LAG FUSE 63MI0A 250V FUSIBLE 63MI0A 250V SICHIERUNG 63MI0A 250V FUSIBILE 63MI0A 250V FUSIBLE	⚠	10566870
FP201	2A5T TIME-LAG FUSE 2A5T FUSIBLE TEMPORISE 2A5T THERMISCHE SICHERUNG 2A5T FUSIBILE TEMPORIZZATO 2A5T FUSIBLE TEMPORIZADO	⚠	10246750
IK007,008,015	IC SUPPORT 2X4 SUPPORT CI 2X4 IC-FASSUNG 2X4 SUPPORTO CI 2X4 SOPORTE CI 2X4		67449100
IR001	IC SUPPORT 4X17 SUPPORT CI 4X17 IC-FASSUNG 4X17 SUPPORTO CI 4X17 SOPORTE CI 4X17		67626900
IR020	IC SUPPORT 2X21 SUPPORT CI 2X21 IC-FASSUNG 2X21 SUPPORTO CI 2X21 SOPORTE CI 2X21		67085500
NH001	CTT5000T UHF/VHF TUNER CTT5000T TETE UHF/VHF CTT5000T UHF/VHF TUNER CTT5000T TUNER UHF/VHF CTT5000T SINTONIZADOR UHF/VHF		20808880
PE130	FOCUS BLOCK 75M0 OHM BLOC FOCUS 75M0 OHM FOCUS BLOCK 75M0 OHM BLOCCO FOCUS 75M0 OHM BLOQUE FOCUS 75M0 OHM	⚠	15249840
PH200	ON/OFF SWITCH CONTACTEUR MARCHE/ARRET EIN-AUS SCHALTER CONTATTORE ACCESO/SPENTO CONTACTOR MARCHA/PARADA	⚠	10276500
PT070	ELECTRONIC/OPTICAL BLOCK BLOC ELECTRONIQUE/OPTIQUE ELECTRONISCH/OPTIK BLOCCO ELETTRONICO/OTTICO BLOQUE ELECTRONICO/OPTICO		25339420
PT580	SPARK GAP ECLATEUR FUNKENSTRECKE SPINTEROMETRO EXPLOSOR	⚠	15154190
SW001,002, 003,004,005, 006,007	MICROSWITCH MICRO CONTACTEUR MIKROSCHALTER MICROINTERRUTTORE MICROCONTACTOR		10731200

EQUIPMENT/PRESENTATION
EQUIPEMENT/PRESENTATION
AUSSTATTUNG/GEHAEUSE
PARTI VARIE
EQUIPO/PRESENTACION

PROTECTIVE CAP, PLASTIC 35071000
PROTECTEUR PLASTIQUE
ABDECKUNG, KUNSTSTOFF
PROTEZIONE IN PLASTICA
PROTECCION, PLASTICO

UPPER BOX 35070930
EMBALLAGE SUPPERIEURE
KARTON OBEN
IMBALLAGGIO SUPERIORE
EMBALAJE SUPERIOR

FOLDING BOX RP46, CPL 35070900
EMBALLAGE CARTON RP46 COMPLET
KARTON RP46, KPL
IMBALLAGGIO CARTONE RP46
EMBALAJE CARTON RP46

ROLLER HOLDER 35070050
SUPPORT ROUE
SCHWINGROLLE HALTER
SUPPORTO RUOTA
SOPORTE RUEDA

ROLLER 35070040
ROUE
SCHWINGROLLE
ROTELLA
RUEDA

FITTING UPPER 10521350
DESSUS DE CARTON
POLSTER OBEN
DISTANZIATORE SUPERIORE
CALZO SUPERIOR

FITTING DOWNER 10521340
FOND DE CARTON
POLSTER UNTEN
DISTANZIATORE INFERIORE
CALZO INFERIOR

FITTING RIGHT/LEFT 10521360
COTE DE CARTON
POLSTER RECHTS/LINKS
DISTANZIATORE DESTRO/SINISTRO
CALZO DERECHA/IZQUIERDA

ADAPTER ANTENNA 10460690
ADAPTATEUR D'ANTENNE
ADAPTER ANTENNE
ADATTATORE ANTENNA
ADAPTADOR ANTENA

CABINET ASSY 25402670
COFFRET EQUIPE
GEHAEUSE KPL
MOBILE COMPLETO
MUEBLE EQUIPADO

REAR PANEL ⚠ 10527470
RUECKWAND
PANNELLO POSTERIORE
TAPA POSTERIOR

LOGO TELEFUNKEN 25354580
LOGO TELEFUNKEN
SCHRIFTZUG TELEFUNKEN
MARCHIO TELEFUNKEN
LOGOTIPO TELEFUNKEN

FRONT PANEL 10570160
FACADE
FRONTPLATTE
PANNELLO FRONTALE
PANEL FRONTAL

COVER SCART SOCKET 25298150
CACHE PRISE PERITEL
ABDECKUNG EURO-AV-BUCHSE
COPERCHIO EUROPRESA NORMALIZZATA
CUBIERTA EUROCONECTOR

UNIT FOCUS SUPPORT ⚠ 15143370
SUPPORT BLOC FOCUS
BLOCK FOCUS HALTER
SUPPORTO GRUPPO FOCUS
SOPPORTO BLOQUE FOCUS

8R OHM 15W LOUDSPEAKER 80X160 10317130
8R OHM 15W HAUT PARLEUR 80X160
8R OHM 15W LAUTSPRECHER 80X160
8R OHM 15W ALTOPARLANTE 80X160
8R OHM 15W ALTAVOZ 80X160

8R OHM 15W LOUDSPEAKER 27X42 10317160
8R OHM 15W HAUT PARLEUR 27X42
8R OHM 15W LAUTSPRECHER 27X42
8R OHM 15W ALTOPARLANTE 27X42
8R OHM 15W ALTAVOZ 27X42

4R OHM 30W LOUDSPEAKER 130MM 10517870
4R OHM 30W HAUT PARLEUR 130MM
4R OHM 30W LAUTSPRECHER 130MM
4R OHM 30W ALTOPARLANTE 130MM
4R OHM 30W ALTAVOZ 130MM

ON/OFF BUTTON 25380730
TOUCHE MARCHE/ARRET
EIN-AUS TASTE
TASTO ACCESO/SPENTO
TECLA MARCHA/PARADA

POWER SUPPLY LEAD ⚠ 10318870
CORDON D'ALIMENTATION
NETZKABEL
CAVO DI ALIMENTAZIONE
CABLE DE ALIMENTACION

SCREEN THICKNESS 3MM 10574350
ECRAN EPAISSEUR 3MM
BILDSCHIRM DICKE 3MM
SCHERMO SPESSORE 3MM
PANTALLA ESPESOR 3MM

ADHESIVE TAP FOR 10540360 15236120
RUBAN ADHESIF 10540360
KLEBEBAND FUR 10540360
NASTRO ADESIVO POR 10540360
CINTA ADHESIVO POR 10510360

MIRROR 10520730
MIROIR
SPIEGEL
SPECCHIO
ESPEJO

CATHODE RAY TUBE GREEN 15339670
TUBE CATHODIQUE VERT
FARBBILDROEHRE GRUEN
TUBO CATODICO VERDE
T.R.C VERDE

CATHODE RAY TUBE BLUE 15339690
TUBE CATHODIQUE BLEU
FARBBILDROEHRE BLAU
TUBO CATODICO AZZURO
T.R.C AZUL

CATHODE RAY TUBE RED 15339660
TUBE CATHODIQUE ROUGE
FARBBILDROEHRE ROT
TUBO CATODICO ROSSO
T.R.C ROJO

DEFLECTION YOKE 10540340
DEVIATEUR
ABLENKEINHEIT
BOBINA DI DEFLESSIONE
DEFLECTOR

FLEXI BOARD (COIL BSVM) 10540360
CABLE PLATINE (BOBINE BSVM)
KABEL PLATTE (SPULE BSVM)
CAVO PIASTRA (BOBINA BSVM)
CABLE PLATINA (BOBINA BSVM)

RC4130 REMOTE CONTROL 21012550
RC4130 TELECOMMANDE
RC4130 FERNBEDIENUNG
RC4130 TELECOMANDO
RC4130 TELEMANDO

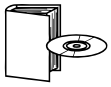

RP744E PARTS LIST 35088420
RP744E LISTE DE PIECES DETACHEES
RP744E ERSATZTEILLISTE
RP744E LISTA PARTI DI RICAMBIO
RP744E LISTA DE PIEZAS DE REPUESTO

CDROM ICC19 VERSION 2 35075700
CDROM ICC19 VERSION 2
CDROM ICC19 VERSION 2
CDROM ICC19 VERSION 2
CDROM ICC19 VERSION 2

RP19 SERVICE MANUAL EUROPE 35064590
RP19 DOC TECHNIQUE EUROPE
RP19 TECHNISCHE DOKUMENTATION EUROPE
RP19 DOCUMENTAZIONE TECNICA EUROPE
RP19 DOCUMENTACION TECNICA EUROPE

RP C19 UM D/F/I/E/GB/NL/S/DK/PL/CZ/H/SK/RU/GR/P 25392410
RP C19 NU D/F/I/E/GB/NL/S/DK/PL/CZ/H/SK CZ/H/SK/RU/GR/P
RP C19 BA D/F/I/E/GB/NL/S/DK/PL/CZ/H/SK CZ/H/SK/RU/GR/P
RP C19 IU D/F/I/E/GB/NL/S/DK/PL/CZ/H/SK CZ/H/SK/RU/GR/P
RP C19 IU D/F/I/E/GB/NL/S/DK/PL/CZ/H/SK CZ/H/SK/RU/GR/P

RP744E UM TF D/F/I/E/GB/NL/S/DK/PL/CZ/H/P/GR/SK/RU 25392060
RP744E NU TF D/F/I/E/GB/NL/S/DK/PL/CZ/H/P/GR/SK/RU
RP744E BA TF D/F/I/E/GB/NL/S/DK/PL/CZ/H/P/GR/SK/RU
RP744E IU TF D/F/I/E/GB/NL/S/DK/PL/CZ/H/P/GR/SK/RU
RP744E IU TF D/F/I/E/GB/NL/S/DK/PL/CZ/H/P/GR/SK/RU

The description and characteristics given here are of informative significance only, and non committal. To keep up the high quality of our products, we reserve the right to make any changes or improvement without previous notice. • Les descriptions et caractéristiques figurant sur ce document sont données à titre d'information et non d'engagement. En effet, soucieux de la qualité de nos produits, nous nous réservons le droit d'effectuer, sans préavis, toute modification ou amélioration. • Die Beschreibungen und Daten in dieser Anleitung dienen nur zur Information und sind nicht bindend. Um die Qualität unserer Produkte ständig zu verbessern, behalten wir uns das Recht auf Änderungen vor. • Le descrizioni e le caratteristiche date su questo documento sono fornite a semplice titolo informativo e senza impegno. Ci riserviamo il diritto di eseguire, senza preavviso, qualsiasi modifica o miglioramento. • Las descripciones y características que figuran en este documento se dan a título de información y no de compromiso. En efecto, en bien de la calidad de nuestros productos, nos reservamos el derecho de efectuar, sin previo aviso, cualquier modificación o mejora.

THOMSON multimedia S.A au capital de 4 594 812 200 FF - 46, Quai Alphonse Le Gallo 92648 Boulogne Cedex FRANCE - RCS NANTERRE B 333 773 174

THOMSON MULTI MEDIA

Brandt FERGUSON **NORDMENDE** SABA **TELEFUNKEN** **THOMSON**

TV

SERVICE MANUAL
DOCUMENTATION TECHNIQUE
TECHNISCHE DOKUMENTATION
DOCUMENTAZIONE TECNICA
DOCUMENTACION TECNICA

ICC19 100 Hz

ICC19 B5B40240 00
B5BB0240 00
B5D80240 00
B5D80740 00
B5E80640 00
B5E80740 00
B5F80240 00

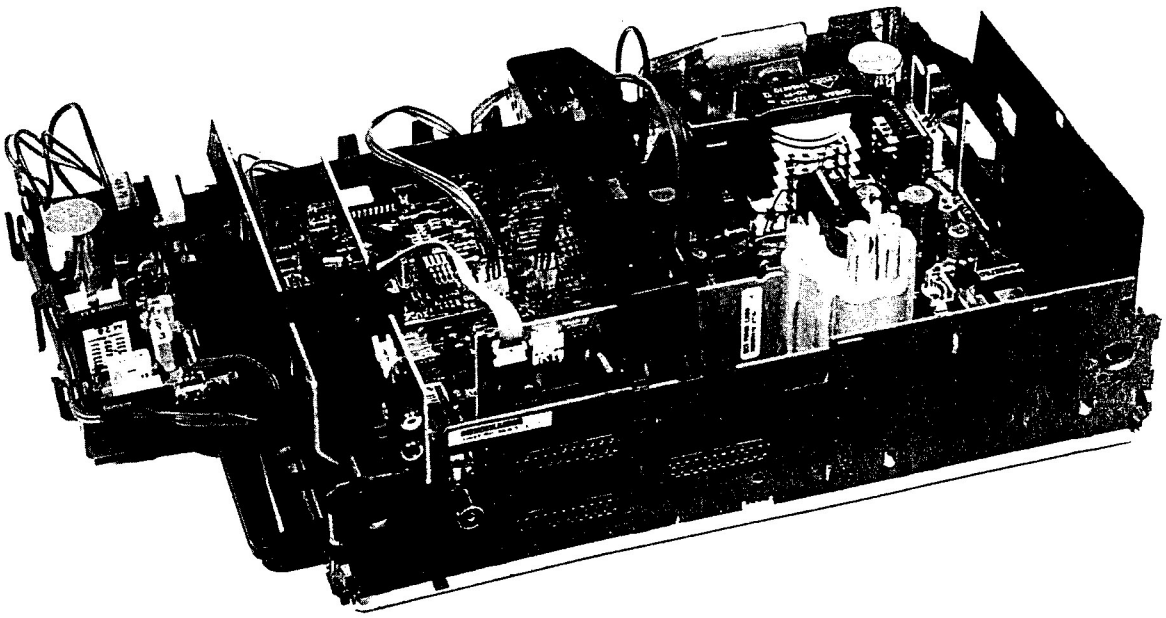

WARNING : *Before servicing this chassis read the safety recommendations.*
ATTENTION : *Avant toute intervention sur ce châssis, lire les recommandations de sécurité.*
ACHTUNG : *Vor jedem Eingriff auf diesem Chassis, die Sicherheitsvorschriften lesen.*
ATTENZIONE : *Prima di intervenire sullo chassis, leggere le norme di sicurezza.*
IMPORTANTE : *Antes de cualquier intervención, leer las recomendaciones de seguridad.*

⚠ Indicates critical safety components, and identical components should be used for replacement. Only then can the operational safety be garanteed.

Le remplacement des éléments de sécurité (repérés avec le symbole ⚠) par des composants non homologués selon la Norme CEI 65 entraine la non-conformité de l'appareil. Dans ce cas, la responsabilité du fabricant n'est plus engagée.

Wenn Sicherheitsteile (mit dem Symbol ⚠ gekennzeichnet) nicht durch Original - Ersatzteile ersetzt werden, erlischt die Haftung des Herstellers.

La sostituzione degli elementi di sicurezza (marcati con il segno ⚠) con componenti non omologati secondo la norma CEI 65 comporta la non conformitá dell'apparecchio. In tal caso è "esclusa la responsabilità " del costruttore.

La sustitución de elementos de seguridad (marcados con el simbolo ⚠) por componentes no homologados segun la norma CEI 65, provoca la no conformidad del aparato. En ese caso, el fabricante cesa de ser responsable.

MEASUREMENT CONDITIONS - CONDITIONS DE MESURES - MESSBEDINGUNGEN CONDIZIONI DI MISURA - CONDICIONES DE MEDIDAS

RECEIVER : On UHF,input level : 1 mV, bar test pattern :
- PAL, I standard, 100% white.

Via the scart socket, input level : 1 Vpp, bar test pattern :

Colour, contrast and brightness at mid-position, sound at minimum.
Programme selected : PR 01.

DC voltages measured between the point and earth using a digital voltmeter.

RECEPTEUR : En UHF, niveau d'entrée 1 mV mire de barres
- SECAM, Norm L, Blanc 100%.

Par la prise Péritélévision, niveau d'entrée 1 Vcc, mire de barres .

Couleur, contraste, lumière à mi-course, son minimum.
Programme affecté PR 01.

Tensions continues relevées par rapport à la masse avec un voltmètre numérique.

EMPFÄNGER : Bei UHF Eingangspegel 1 mV, Farbbalken :
- PAL, Norm G, Weiss 100%.

Über die Scartbuchse : Eingangspegel 1 Vss, Farbbalken :

Farbe, Kontrast, Helligkeit in der Mitte des Bereichs, Ton auf Minimum.
Zugeordnetes Programm PR 01.

Gleichspannungen mit einem digitalen Voltmeter zur Masse gemessen.

RICEVITORE : In UHF, livello d'entrata 1 mV, monoscopio par barre :
- PAL, norma G, bianco 100%.

Par la presa SCART, livello d'entrata 1 Vcc, monoscopio per barre :

Colore, Contrasto, Luce a metá corsa, Suono minimo.
Programma designato PR 01.

Tensioni continue rilevate rispetto alla massa con un voltametro numerico.

RECEPTOR : En UHF, nivel de entrada 1 mV, mira de barras :
- PAL, norma G, blanco 100%.

Por la toma Peritelevision, nivel de entrada 1 Vpp mira de barra.

Color, Contraste, luz a mitad de carrera, Sonido minimo.
Programa afectado PR 01.

Tensiones continuas marcadas en relacion a la masa con un voltimetro digital.

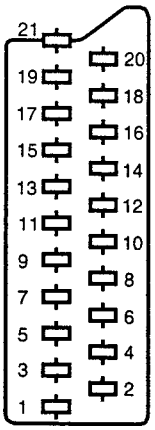

NOTE : (MAIN) ... etc. identifies each pcb module.

NOTE : (MAIN) ... etc. repères des platines constituant l'appareil.

HINWEIS : (MAIN) ...usw. Kennzeichnung der Platinen, aus denen das Gerät zusammengesetzt ist.

NOTA : (MAIN) ... ecc. indicazioni delle piastre che costituiscono l'apparecchio.

NOTA : (MAIN) ... etc. marcas de las placas que constituyen el aparato.

		ENGLISH	FRANÇAIS	DEUTSCH	ITALIANO	ESPAÑOL
1	⊖→	AUDIO "R"	AUDIO "D"	AUDIO "R"	AUDIO "D"	AUDIO "D"
2	→⊕	AUDIO "R"	AUDIO "D"	AUDIO "R"	AUDIO "D"	AUDIO "D"
3	⊖→	AUDIO "L"	AUDIO "G"	AUDIO "L"	AUDIO "S"	AUDIO "I"
4	⊥	AUDIO	AUDIO	AUDIO	AUDIO	AUDIO
5	⊥	" BLUE "	" BLEU "	"BLAU"	"BLU"	"AZUL"
6	→⊕	AUDIO "L" MONO	AUDIO "G" MONO	AUDIO "L" MONO	AUDIO "S" MONO	AUDIO "I" MONO
7	→⊕	" BLUE "	" BLEU "	"BLAU"	BLU	AZUL
8	→⊕	SLOW SWITCH	COMMUT. LENTE	AV UMSCHALTUNG	"COMMUTAZIONE LENTA"	"CONMUTACION LENTA"
9	⊥	" GREEN "	"VERT"	"GRÜN"	"VERDE"	"VERDE"
10	NC					
11	→⊕	" GREEN "	"VERT""	"GRÜN"	"VERDE"	"VERDE"
12	NC					
13	⊥	" RED "	"ROUGE"	"ROT"	"ROSSO"	"ROJA"
14	NC					
15	→⊕	" RED "	"ROUGE"	"ROT"	"ROSSO"	"ROJA"
16	→⊕	FAST SWITCH	COMMUT. RAPIDE	AUSTASTUNG	"COMMUTAZIONE RAPIDA"	"CONMUTACION RAPIDA"
17	⊥	VIDEO	VIDEO	VIDEO	VIDEO	VIDEO
18	⊥	FAST SWITCH	COMMUT. RAPIDE	AUSTASTUNG	"COMMUTAZIONE RAPIDA"	"CONMUTACION RAPIDA"
19	⊖→	VIDEO	VIDEO	VIDEO	VIDEO	VIDEO
20	→⊕	VIDEO OR "SYNC"	VIDEO SYNCHRO	VIDEO ODER SYNCHRO	VIDEO O SINCRO	VIDEO O SINCRO
21	⊖→	PLUG SCREEN BOX	BLINDAGE PRISE	ABSCHIRMUNG DES STECKERS	ARMATURA DELLA SPINA	BLINDAJE DEL ENCHUFE

⊖→ : OUTPUT - SORTIE - AUSGANG - USCITA - SALIDA

→⊕ : INPUT - ENTRÉE - EINGANG - ENTRATA - ENTRADA

⊥ : EARTH - MASSE - MASSE - MASSA - MASA

INFORMATION - INFORMATIONS - INFORMATIONEN - INFORMAZIONE - INFORMACIONES

CHASSIS DESIGNATION - DESIGNATION DES CHASSIS -BEZEICHNUNG DES CHASSIS - DESCRIZIONE DEI TELAI - DESIGNACIÓN DE LOS CHASIS

(GB) The references mentioned on the cover give the list of chassis covered in the present document.
The designation of a specific chassis equipping the receptor is marked on the identification plate placed at the back of the apparatus.

(F) Les références indiquées en couverture donnent la liste des chassis traités dans le présent document.
La désignation d'un chassis spécifique équipant le récepteur est inscrite sur la plaque signalétique située à l'arrière de l'appareil.

(D) Die auf dem Deckblatt angegeben Nummern sind die in dieser Unterlage enthaltenen Chassis

(I) I riferimenti indicati in copertina danno la lista dei telai trattati nel presente documento.
La descrizione di un telaio specifico installato sul ricevitore figura sulla targa delle caratteristiche situata sulla parte posteriore dell'apparecchio.

(E) Las referencias indicadas en la cubierta dan la lista de los chasis tratados en el presente documento.
La designación de un chasis específico que equipa el receptor se inscribe en la placa del fabricante, situada en la parte trasera del aparato.

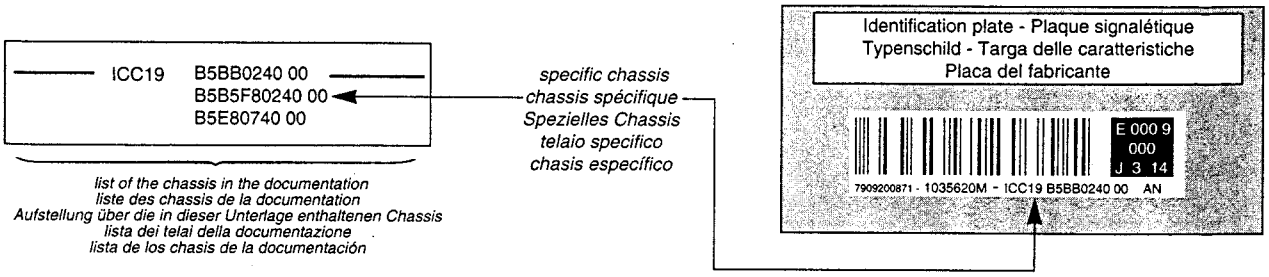

list of the chassis in the documentation
liste des chassis de la documentation
Aufstellung über die in dieser Unterlage enthaltenen Chassis
lista dei telai della documentazione
lista de los chasis de la documentación

RECEIVER COMPOSITION - COMPOSITION DES RECEPTEURS - BESTÜCKUNG DER EMPFÄNGER - COMPOSIZIONE DEI RICEVITOR - COMPOSICIÓN DE LOS RECEPTORES

Chassis identification table:
1- Main chassis designation code
2- Chassis configuration (modules) and the page number's where they are described.
3- The chassis - environment pair that are contained in the receptors described in the present documentation.

Le tableau ci-dessous regroupe :
1- La désignation des chassis
2- L'environnement électronique de chaque chassis (modules) et le numéro de page où il est décrit.
3- L'association chassis-environnement composant les récepteurs décrits dans la présente documentation.

Die nachfolgendeTabelle beinhaltet:
1 - Die Chassisbezeichnung
2 - Die elektrischen Baugruppen (Module) der Chassis und die Seitenzahl auf der sie abgebildet sind.
3 - Die Chassis und Module der Empfänger aus dieser Dokumentation.

La tabella qui di seguito contiene:
1 - La descrizione dei telai
2 - La configurazione di ogni telaio (moduli) e il numero di pagina nella quale è descritto
3 - L'abbinamento telaio-struttura che compone i ricevitori descritti nella presente documentazione

El cuadro siguiente agrupa:
1 - La designación de los chasis
2 - El entorno electrónico de cada chasis (módulos) y el número de página donde está descrito.
3 - La asociación chasis - entorno que compone los receptores descritos en la presente documentación

ICC19 100 Hz

DESCRIPTION CHASSIS	BLOCK DIAGRAM	ADJUST. MAIN	PCB MAIN	SCHEMA MAIN	VIDEO MODULE	CRT MODULE	AUDIO MODULE	TELETEXT MODULE	SCART MODULE	KDB - FCB KB
ICC19 B5B40240 00	5 to 6	7 to 16	17 to 23	24 to 30	31 to 35	36 to 38	39 to 41	42 to 44	45 to 47	48 to 50
ICC19 B5BB0240 00	5 to 6	7 to 16	17 to 23	24 to 30	31 to 35	36 to 38	39 to 41	42 to 44	45 to 47	48 to 50
ICC19 B5D80240 00	5 to 6	7 to 16	17 to 23	24 to 30	31 to 35	36 to 38	39 to 41	42 to 44	45 to 47	48 to 50
ICC19 B5D80740 00	5 to 6	7 to 16	17 to 23	24 to 30	31 to 35	36 to 38	51 to 54	42 to 44	45 to 47	48 to 50
ICC19 B5E80640 00	5 to 6	7 to 16	17 to 23	24 to 30	31 to 35	36 to 38	39 to 41	42 to 44	45 to 47	48 to 50
ICC19 B5E80740 00	5 to 6	7 to 16	17 to 23	24 to 30	31 to 35	36 to 38	51 to 54	42 to 44	45 to 47	48 to 50
ICC19 B5F80240 00	5 to 6	7 to 16	17 to 23	24 to 30	31 to 35	36 to 38	39 to 41	42 to 44	45 to 47	48 to 50

BLOCK DIAGRAM - SCHEMA SYNOPTIQUE - BLOCKSCHALTBILD - SCHEMA A BLOCCI - ESQUEMA DE BLOQUES

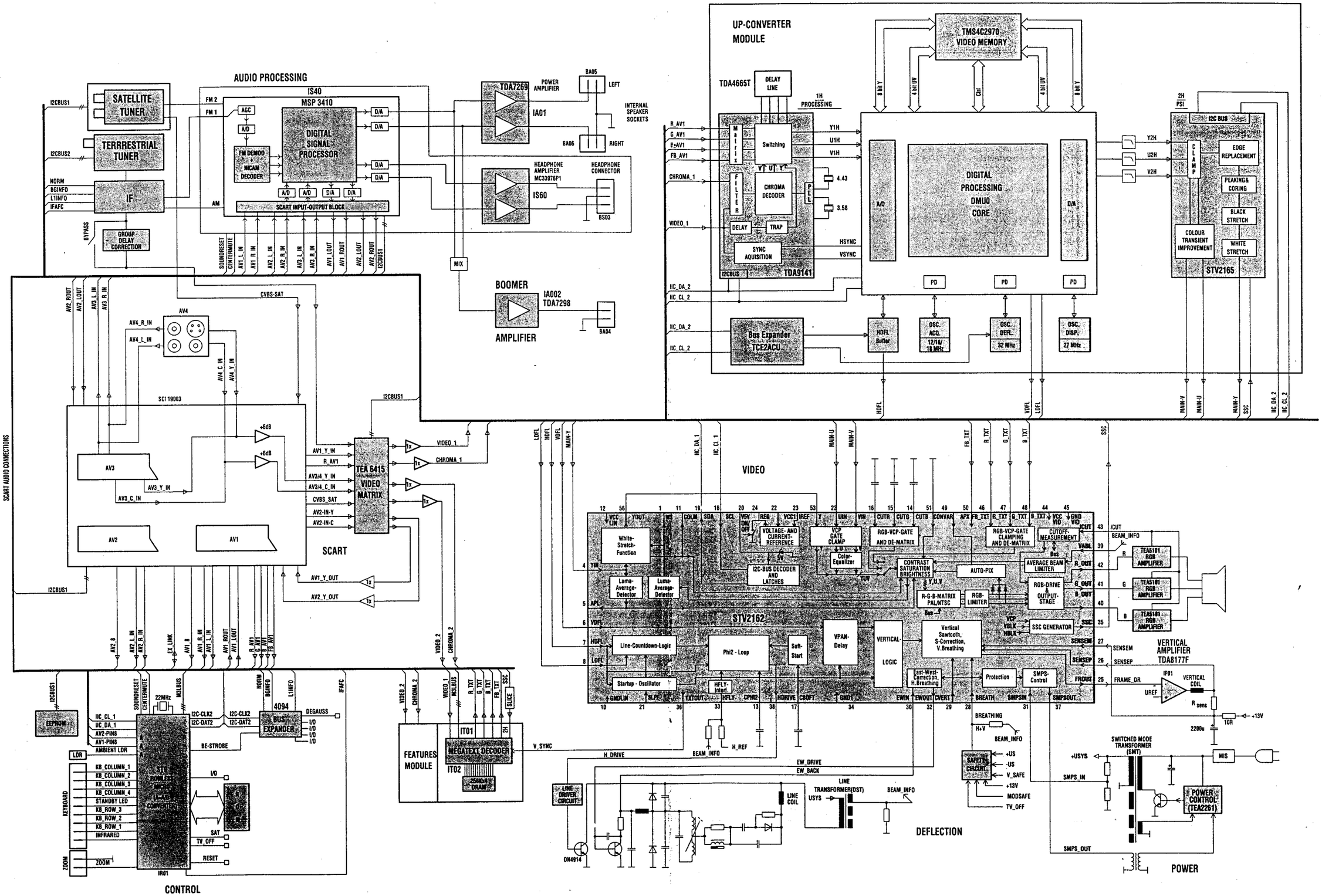

LOCATION OF CONTROLS - EMPLACEMENT DES REGLAGES - SERVICE LAGEPLAN - POSIZIONE REGULATORI DI SERVIZIO - SITUACIÓN DE LOS AJUSTES

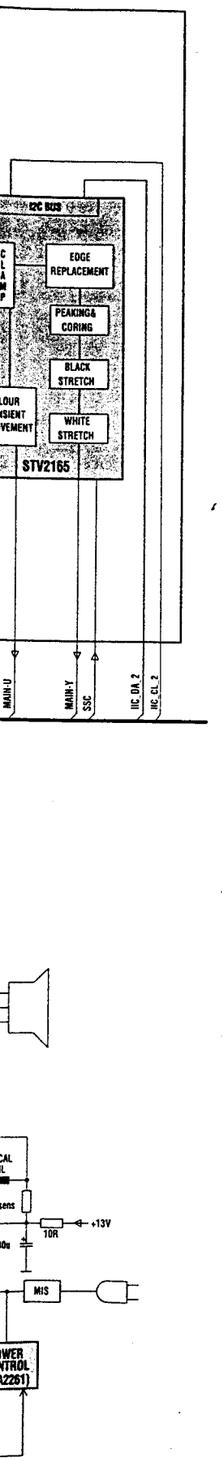

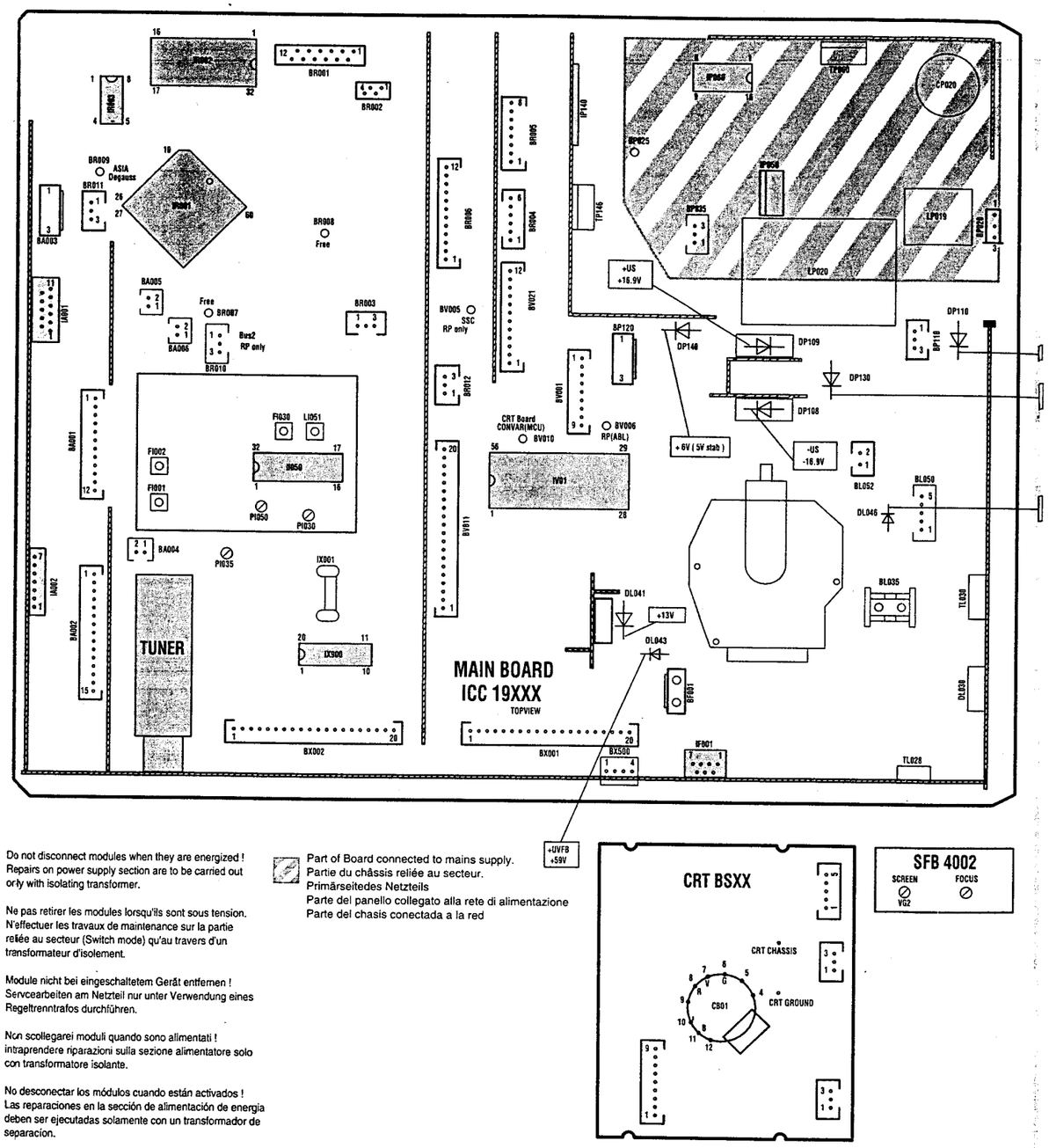

⚠ Do not disconnect modules when they are energized ! Repairs on power supply section are to be carried out only with isolating transformer.

Ne pas retirer les modules lorsqu'ils sont sous tension. N'effectuer les travaux de maintenance sur la partie reliée au secteur (Switch mode) qu'au travers d'un transformateur d'isolement.

Module nicht bei eingeschaltetem Gerät entfernen ! Servcearbeiten am Netzteil nur unter Verwendung eines Regeltrenntrafos durchführen.

Non scollegarei moduli quando sono alimentati ! intraprendere riparazioni sulla sezione alimentatore solo con transformatore isolante.

No desconectar los módulos cuando están activados ! Las reparaciones en la sección de alimentación de energia deben ser ejecutadas solamente con un transformador de separacion.

Part of Board connected to mains supply.
Partie du châssis reliée au secteur.
Primärseitedes Netzteils
Parte del panello collegato alla rete di alimentazione
Parte del chasis conectada a la red

ADJUSTMENTS - REGLAGES - EINSTELLUNGEN - REGOLAZIONE - AJUSTES

U Sys	SERVICE MODE	Standard TV - Settings : OMA Position TV to AV1 : Black test pattern	V= DP 110	TUBE NAME / DESCRIPTION / Usys jumper / Usys A66EGW 48X322 / 4/3 28" MP / JP915 / 134V +/- 0.5V A59EGD048X322 / 4/3 25" SF / JP914 / 137V +/- 0.5V A68EGD038X322 / 4/3 29" SF / JP914 / 137V +/-0.5V A68EES038X322 / 4/3 29" SF / JP914 / 137V +/- 0.5V W66EGV023X122 / 16/9 28" SF / JP915 / 134V +/- 0.5V W76EGV023X122 / 16/9 32"SF / JP915 / 134V+/- 0.5V W76EGV023X122 / 16/9 28"SF / JP915 / 134V +/- 0.5V W76EGX023X122 / 16/9 32"SF / JP915 / 134V +/- 0.5V
IF Alignment VCO Standard BG	FI030	Switch set to standard BG IF Signal 38.9 MHz (BG) 30 mV G 75Ω → TUNER 11 NH01	V= RI078 → AFC (uP) 42 IR01	Adjust FI30 / PI54 for 2,5VDC +/-0.1V
VIDEO-LEVEL Alignment	PI030 PI035	Standard Signal (BG / L) 15kHz test pattern 3 mV G 75Ω → TV set Antenna	Oscillo. → SCART Video output	Adjust PI030 : standard BG Adjust PI035 : standard L for V = 0,7 Vpp (Black/white level)
U G2 METHOD 1 Measurment method	G2 poten-tiometer	Standard TV - Settings : OMA Position TV to AV1 : Black test pattern	highest output CRT 1910X (100Hz) : R signal : IB01 Pin 15 G signal : IB03 Pin 15 B signal : IB02 Pin 15	V 1 - Adjust VG2 : V= 160V +/- 5 V 2 - Adjust Focus 3 - Adjust VG2 : V= 160V +/- 3V
METHOD 2 Cutoff counter method SERVICE MODE	SERVICE MODE	Standard TV - Settings : OMA Position No test pattern (generated by internal text processor).		Adjust R-Cut off and G-Cut-off to 80H temporary. Select G2 Alignment in Service Mode Adjust the lowest value to: Select "Restore" in Service Mode and press "OK" to restore the cut-off values. Tube Type / Value A66EGW / 60H A59EGD / 50H A68EGD / 50H A68EES / - W66EGV / 50H W76EGV / 60H A90AFF / 50H RP 4/3 / - RP 16/9 / -
FOCUS	FOCUS	Test pattern (standard values)		Sharp picture

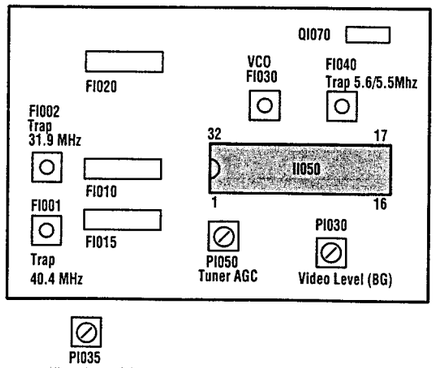

SERVICE MODE (GB) — MODE SERVICE (F) — SERVICE - MODE (D) — SERVICE - MODE (I) — MODO SERVICIO

I - ENTER/EXIT SERVICE MODE - ENTREE/SORTIE DU MODE SERVICE - EIN-AUSTIEG SERVICE MODE - ACCESSO/USCITA ALLA/DALLA FUNZIONE - ENTRADA/SALIDA MODO SERVICIO

1 ACCESSING SERVICE MODE

TV Control Panel Access

- Turn "Off" the TV using the **ON/OFF** button.
- Press the **PR-** and **VOL-** buttons ,hold them down and switch "On" the TV with the **ON/OFF** button.
- After the normal switch on time the main service menu appears on the screen.

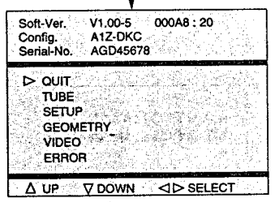

Note :

In service mode :
- *The child lock function is re-initialized*
- *The look function (PIN Number) is ignored.*
- *Clear any wake-up/sleep timers*
- *Pin 8 of the scart plug has to be ignored.*
- *AV- Link WSS detection , EPG and Teletext have to be disabled.*
- *Automatic stand-by functions, in case of no antenna signal have to be disabled.*
- *Contrast, colour, brightness : factory settings.*
- *Sharpness : middle (nominal)*
- *Contrast expander to low.*
- *Install Mode disabled.*
- *Default format and zoom..*

1 ACCES AU MODE SERVICE

Accès avec le clavier du téléviseur

- Arrêter le TV avec la touche **M/A.**
- Tout en appuyant sur les touches **PR -** et **VOL - ,** mettre le TV en service à l'aide de la touche **M/A.**
- Maintenir enfoncées les touches **PR -** et **VOL -.**
  Le menu suivant apparaît.

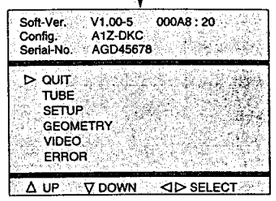

Note :

En mode service:
- *Le verrouillage parental est effacé (réinitialisé).*
- *La fonction de verrouillage (Pin number) est ignorée.*
- *La programmation des heures «reveille/matin» est annulée.*
- *Possibilité de passer en mode service avec commutation lente active.*
- *AV- Link , la détection WSS, l'EPG et le Vidéotexte ne sont pas validés.*
- *La fonction de stand-by automatique en cas d'absence de signal d'antenne n'est pas validée.*
- *Les valeurs de réglages usine sont affectées au contraste, à la couleur et à la lumière.*
- *Le contour est appelé à sa valeur moyenne.*
- *L'expansion contraste est au niveau bas.*
- *Le mode d'installation et l'ambiance «Light sensor» ne sont pas valdes.*
- *Zoom et format ignorées.*

1 EINSTIEG IN DEN SERVICE MODE

Zugriff über die Tastatur des Fernsehgeräts

Fernsehgerät über die EIN/AUS - Taste ausschalten.
Gleichzeitig die Tasten PR- und VOL- drücken und den TV über die EIN/AUS-Taste einschalten.
Die Tasten PR- und VOL - gedrückt halten.

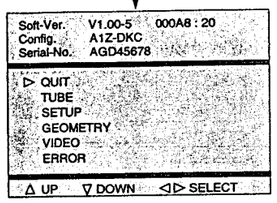

Anmerkung :

Im SERVICE MODE :
- *wird die Sperrfunktion (PIN-Nummer) ignoriert und die Kindersicherung gelöscht (reinitialisiert).*
- *werden alle Ein- und Ausschaltzeitgeber gelöscht.*
- *wird die SCART - Scaltspannung ignoriert.*
- *werden AV- Link WSS, EPG und Teletext gesperrt*
- *wird die Automatische Abschaltung bei fehlendem Antennensignal gesperrt.*
- *werden Kontrast, Farbe und Helligkeit auf standardwerte gesetzt.*
- *wird die bildschärfe auf Mittelstellung (nominal) gesetzt.*
- *wird der Kontrast-Expander auf "gering.." gesetzt.*
- *wird der Installations Modus gesperrt.*
- *wird das Standardformat bzw. der Standard-Zoom-modus gewählt.*

1 ACCESSO AL SERVICE MODO

tramite i comandi del televisore

- Spegnere il TV mediante il pulsante ON/OFF.
- Premere i tasti **PR- e VOL-** accendendo il TV con il pulsante ON/OFF.
- Premere i pulsanti **PR - e VOL -.**

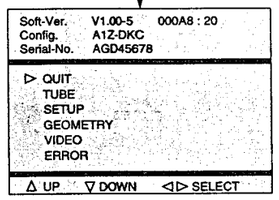

Nota :

Nel service mode:
- *la funzione Blocco (Numero Pin) viene ignorata e la funzione Blocco Bambini è reinizializzata.*
- *Cancellare la programmazione sveglia*
- *Il piedino 8 della scart deve essere ignorato.*
- *I riconoscimenti AV-Link WSS, EPG e televideo deveno essere disabilitati.*
- *Funzione automatica di standby, nel caso di mancanza del segnale d'antenna deve essere disabilitata.*
- *Contrasto, colore, luminosità : regolazioni di fabrica.*
- *Nitidezza: media (nominale)*
- *Espansore contrasto troppo basso.*
- *IModo Install disabilitato.*
- *Formato default e zoom.*

1 ACCESO AL MODO SERVICIO

Acceso panel control TV

- Apague la **TV con el botón** MARCHA:PARAD
- Pulse los **botones PR - y VOL -** y sin soltar
  MARCHA:**PARADA.**
- Libere los **botones PR - y VOL - .**

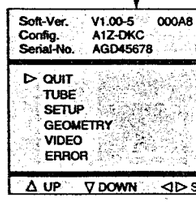

Nota :

En modo servicio:
- *Se ignora la función de bloqueo y se inicial ninos".*
- *Anula todos las horas programadas*
- *La patilla 8 del SCART es ignorada*
- *La detección WSS AV Link, EPG, y Telext*
- *El apagado automático en caso de ausenc desactivado.*
- *El contraste,color y brillo son puestos a los*
- *la nitidez es puesta al punto medio.*
- *La expansión de contrast al nivel bajo*
- *Modo Instalación es desactivado.*
- *Zoom y formato ignorados.*

2 TEMPORARY EXIT FROM SERVICE MODE

- Press Exit on the Remote control.
- Everyday use menu can be accessed via Menu button.

- Field Service Menu can be re-entrered via Blue button.

2 SORTIE TEMPORAIRE DU MODE SERVICE

- Utiliser la touche Exit de la télécommande.
- Le menu utilisateur peut être accessible via la touche «Menu».

- Pour entrer à nouveau dans le mode service utiliser la touche bleue.

2 VORÜBERGEHENDES VERLASSEN DES SERVICE MODE

- Auf der Fernbedienung EXIT drücken.
- Mit der Taste Menü gelangen Sie zum Menü Übersicht

- Mit der blauen Taste gelangen sie zum Service-Menü.

2 USCITA TEMPORANEA DAL SERVICE MODE

- Premere Exit sul telecomando.
- Al menu di uso quotidiano si accede attraverso il pulsante Menu.

- É possibile rientrate nel Menu Field Service attraverso il pulsante Blue.

2 SALIDA TEMPORAL DEL MODO SERVIC

- Pulse Salir en el mando a distancia
- Con el botón **Menu puede** acceder al menú de

- Puede entrar **al** Menú Servicio con el botón azu

3 EXITING FROM SERVICE MODE

Remote Control — **TV control panel** — **on/off key or Stand-by**

- Go to the point QUIT in the Field service Mode main menu.
- Press «<», «OK» or «>» button
- Press «VOL.+»button
- Stand-by function or «off» with on/off key.
- TV mode.

Values or adjustments are no stored before exiting from service mode will not be written into the NVM

3 SORTIE DEFINITIVE DU MODE SERVICE

télécommande — **clavier du téléviseur** — **Inter M/A ou Stand-by**

- Aller au point «QUIT» dans le menu principal du mode service.
- Appuyer sur «<», «OK» ou «>»
- -Appuyer sur «VOL+»
- Foncion Stand-by ou «off» par M/A
- Mode TV.

Les valeurs ou réglages non mémorisées avant la sortie ne seront pas écrites en NVM.

3 ENDGÜLTIGES VERLASSEN DES SERVICE MODE

Fernbedienung — **TV-Bedienfeld** — **EIN /Aus - Taste**

- Wenn der Zeiger im Hauptmenü des Service-Modus auf BEENDEN steht
- Taste «<», «OK» oder «>»drücken
- -Taste «VOL+» drücken
- Mit Standby-Funktion oder **EIN/AUS** - taste ausschalten
- TV Modus

Werte und Einstellungen, die nicht vor dem Verlassen des Service-Modus gespeichert wurden, werden nicht in den Permanentspeicher übernommen

3 USCIRE DAL SERVICE MODE

telecomando — **Panello controllo TV** — **Tasto on/off di**

- Andare al punto QUIT nel Modo Field service del Menu principale
- Premere «<»,«OK» o «>»
- Premere «VOL.+»
- Funzione Stand-by o «off» con il tasto on/off
- Modo TV.

Valori e regolazioni non vengono memorizzati prima di uscire dal Modo service e non vengono scritti nell'NVM

3 SALIDA DEL MODO SERVICIO

telecomando — **Panel de control TV**

- Vaya al punto QUIT del menú principal de modo Servicio
- Pulse el botón «<»,«OK» o «>»
- Pulse el botón«VOL.+»
- Modo TV.

Los valores o ajustes no se guardan modo servicio y no se escriben en e

MODO SERVICIO (E)

O SERVICIO

1 ACCESO AL MODO SERVICIO

Acceso panel control TV

- Apague la TV con el botón MARCHA:PARADA.
- Pulse los botones **PR -** y **VOL -** y sin soltarlos,pulsar la tecla MARCHA:PARADA.
- Libere los botones **PR -** y **VOL -** .

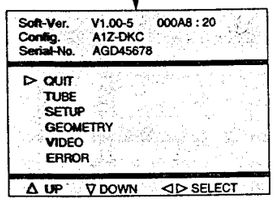

Nota :

En modo servicio:
- *Se ignora la función de bloqueo y se inicializa la función "cerradura ninos".*
- *Anula todos las horas programadas*
- *La patilla 8 del SCART es ignorada*
- *La detección WSS AV Link, EPG, y Telexto son desactivados.*
- *El apagado automático en caso de ausencia de señal de antena es desactivado.*
- *El contraste,color y brillo son puestos a los valores de fábrica.*
- *la nitidez es puesta al punto medio.*
- *La expansión de contrast al nivel bajo*
- *Modo Instalación es desactivado.*
- *Zoom y formato ignorados.*

2 SALIDA TEMPORAL DEL MODO SERVICIO

- Pulse Salir en el mando a distancia
- Con el botón Menu puede acceder al menú de uso cotidiano.

- Puede entrar al Menú Servicio con el botón azul.

3 SALIDA DEL MODO SERVICIO

telecomando | Panel de control TV | Tecla on/off de

- Vaya al punto QUIT del menú principal de modo Servicio

- Pulse el botón «<»,«OK» o «>»
- Pulse el botón«VOL.+»

- Modo TV.

- Función Stand-by o desconexión (off) con tecla on/off.

Los valores o ajustes no se guardan antes de salir del modo servicio y no se escriben en el NVM

II - NAVIGATION INSIDE THE SERVICE MODE - DEPLACEMENT DANS LE MODE SERVICE SUCHE IN SERVICE MODE - OPZIONI NEL SERVICE MODE - BUSQUEDA EN MODO SERVICIO

1 REMOTE CONTROL - TELECOMMANDE - FERNBEDIENUNG TELECOMANDO - MANDO A DISTANCIA

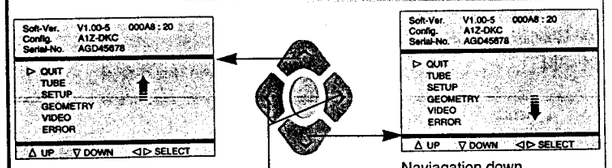

Naviagation up

Naviagation down

- Select option
- Option anwählen
- Selezionare l'opzione
- Seleccionar opción

- "Change" value
- Wert "änden"
- "Cambiare" valore
- "Cambiar" valor

> → VALUE ↗

< → VALUE ↘

2 TV CONTROL PANEL - CLAVIER TV - TASTATUR DES FERNSEHGERÄTS - COMANDI DEL TELEVISORE

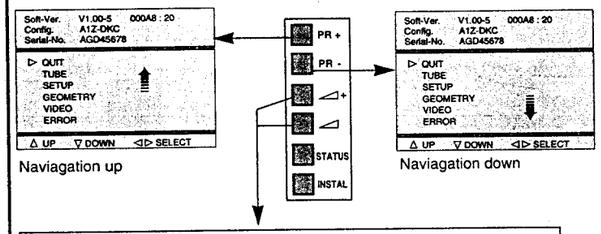

Naviagation up

Naviagation down

- Select option
- Option anwählen
- Selezionare l'opzione
- Seleccionar opción

- "Change" value
- Wert "änden"
- "Cambiare" valore
- "Cambiar" valor

Vol. + → VALUE ↗

Vol. − → VALUE ↘

Changing page - Changement de page Seitenwechsel - Cambiare Pagina - Cambio de página

End of page
Fin de page
Am Seitenende
Fine della pagina
Fin de página

Beginning of Page
Début de page
Am Seitenanfang
Inzio della pagina
Comienzo de página

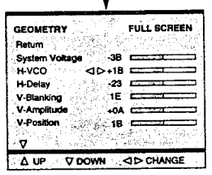

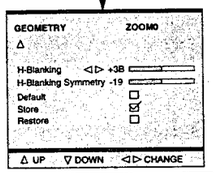

« ∇ »
Indicates a following page
Signifie qu'une page suit.
Bedeutet, daß eine Seite folgt
Indica una pagina seguente
Indica una página siguiente

« Δ »
Indicates a preceding page
Signifie qu'une page précède.
Bedeutet, daß eine Seite vorangeht
Indica una pagina precedente
Indica una página precedente

- The menu turns the page when the cursor reaches the arrow.
- Amener le curseur sur la ligne repérée par« ∇ » ou « Δ » pour passer à la page qui précède ou qui suit.
- Cursor nach « ∇ »,« Δ » zum Seitenwechsel
- Il cursor su « ∇ »,« Δ » cambia pagina.
- Cursor en « ∇ » ,« Δ » cambia las páginas

3 DISPLAYING THE VALUE OF THE SETTING - AFFICHAGE DES VALEURS - ANZEIGE DES EINSTELLUNGSWERTS VISUALIZZAZIONE DEL VALORE DELLA REGOLAZIONE VISUALIZACION DEL VALOR DE AJUSTE

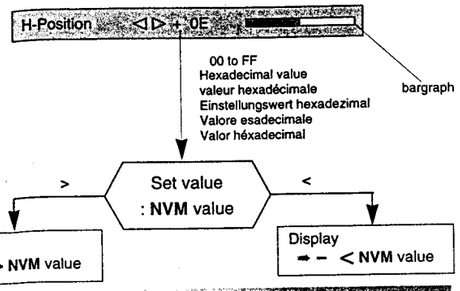

4 TOGGLE FUNCTIONS - VALIDATION DES FONCTIONS EIN-UND AUSSCHALT FUNKTIONEN - FUNZIONI DI COMMUTAZIONE - FUNCION CONMUTACIÓN

To enable a function check (tick) ☒ the box.
Pour valider une fonction cocher ☒ la case correspondante
Zum Implementieren einer Funktion das Kontrollkästchen ☒ aktivieren (ankreuzen)
Per implementare una funzione di verifica, (vistare) ☒ la casella
Para poner en fucionamiento una función verifique (señale) ☒ la casilla

☒ : Implemented function ☐ : No implemented function

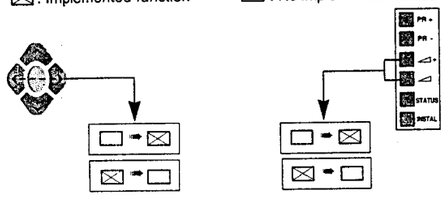

5 STORING VALUES IN MEMORY - MEMORISATION DES VALEURS - SPEICHERN DER WERTE - MEMORIZZAEZ I VALORI - VALORES ALMACENADOS EN LA MEMORIA

After setting, the values are stored in NVM.
Après réglages les valeurs sont mémorisées en NVM.
Nach dem Einstellen werden die Werte im NVM gespeichert.
Dopo la regolazione i valori vengono memorizzati in NVM.
Después del ajuste, los valores son almacenados en NVM

The box ☐ becomes ☒
During alignment, values are temporarily stored in RAM.
En cours d'alignement les valeurs sont mémorisées temporairement en RAM
Während des Abgleichs werden die Werte vorübergehend im RAM gespeichert
Durante l'allineamento i valori vengono memorizzati provvisoriamente sulla RAM
Durante el alineamento, los valores son almacenados temporalmente en RAM

Store ➡ Copies RAM values into NVM
Copie la valeur RAM en NVM
Kopieren des Werts von RAM nach NVM
Copiare i valori RAM in NVM
Copiar valores RAM en NVM

Restore ➡ Copies all values from NVM into RAM.
Copie toutes les valeurs des données NVM en RAM
Kopiert alle NVM-Datenwerte in den RAM
Copiare tutti i valori da NVM sulla RAM
Copia todos los valores de NVM a RAM

ROM Default ➡ All the default values of a page in use are stored in RAM.
L'ensemble des valeurs par défaut d'une page courante est chargé en RAM.
Sämtliche Standardwerte der aktuellen Seite werden im RAM geladen
Tutti i valori di default di una pagina in uso vengono memorizzati sulla RAM
Todos los valores por defecto de la página en curso están almacenados en RAM.

III - LITE-MENU FOR FIELD SERVICE MODE - MENUS DU MODE SERVICE

1 MAIN MENU - MENU PRINCIPAL

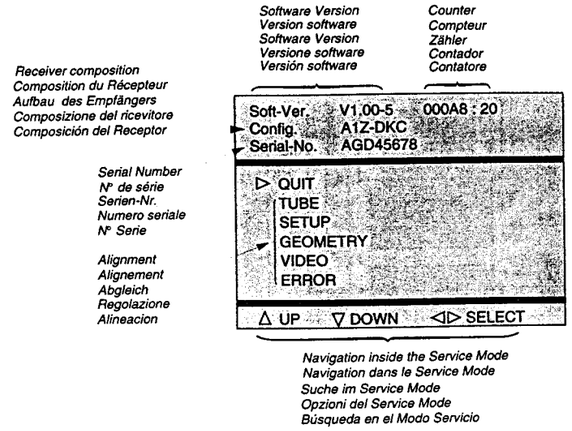

TV CONFIGURATION - CONFIGURATION DU TV - GERÄTEKONFIGURATION - CONFIGURAZIONE DEL TV - CONFIGURACIÓN Y TV

Config.	A1Z-DKC

Character 1 : Tube type : «A»= 4/3 , «W» =16/9
Character 2 : Chassis type : «5» = 50Hz, «1»= 100 Hz
Character 3 : Zoom available : «Z»=yes, «-»=not
Character 4 : Ambiant Sensor : «S»= detected, «-»= not
Character 5 : Dolby : «D»=detected, «-»= not
Character 6 : AV Link detected : «K»=IR link detected, «-»= not
Character 7 : Password mode: «C»= Password stored, «-»= not

TIME COUNTER - COMPTEUR DE TEMPS - ZÄHLER - CONTATORE - CONTADOR
The counter indicates the TV's number of service hours.It counts from to 0 to 65535 hours. The display is hexadecimal.
Le compteur de temps indique le nombre d'heures de service du TV. Il compte de 0 à 65535 heures. L'affichage est en hexadécimal.
Der Zähler zeigt an, wieviele Stunden der Fernseher in Betrieb ist. Die Anzeige ist hexadezimal.
Il contatore indica il numero di ore di servizio del TV. Puo' contatore da 0 a 65535. La visualizzazione è esadecimale.
El contador indica el número de horas de servicio de la TV. Cuenta de 0 a 65535 horas. El visualizador es hexadecimal.

2 SUBMENU - SOUS-MENU

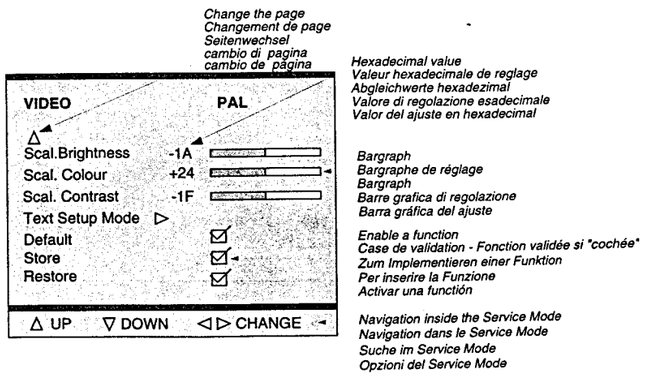

TUBE
Return
Tube type A66ECY...
Store ◁▷ ☑
Restore ☐
Δ UP ∇ DOWN ◁▷ SELECT

SETUP
Return
OSD Position -20
PIN Erase ◁▷ ☑
Clear Prog. ☑
Standard Pan-Euro ...
WSS ☑
∇
Δ UP ∇ DOWN ◁▷ CHANGE

page 1

SETUP
Δ
Text Lang. 1
Ext.HIFI/Dolby Ext. ☑
IR Download ▷
Default ☐
Store ☑
Restore ☐
Δ UP ∇ DOWN ◁▷ CHANGE

page 2

GEOMETRY FULL SCREEN
Return
System Voltage -3B
H-VCO ◁▷+1B
H-Delay -23
V-Blanking 1E
V-Amplitude +0A
V-Position 1B
∇
Δ UP ∇ DOWN ◁▷ CHANGE

page 1

GEOMETRY ZOOM1
Δ
V-Linearity -3B
H-Position ◁▷+0E
H-Amplitude -19
EW-Amplitude +1C
EW-Trapezium 2B
EW-Shape 1D
∇
Δ UP ∇ DOWN ◁▷ CHANGE

page 2

Test Bar pattern used : 4/3 with geometric circle. Adjust separate for 4/3 and 16/9 format. See annexed

VIDEO PAL
Return
Normalise User Settings ☑
G2 Alignment mode ▷
R-Cut off +1B
G-Cut off -1F
R-Drive +3A
G-Drive -3B
B-Drive
Peak-White
∇
Δ UP ∇ DOWN ◁▷ CHANGE

page 1

VIDEO PAL
Δ
Scal.Brightness -1A
Scal. Colour +24
Scal. Contrast -1F
Text Setup Mode ▷
Default ☑
Store ☑
Restore ☑
UP ∇ DOWN ◁▷ CHANGE

page 2

Color standard or RGB is autodetected and displayed opposite the displayed opposite the menu title.

TUBE

Return
Closes the submenu and the main Field Service Mode menu appears.
Retourne au menu principal.
Verlassen des Untermenüs
Chiude il sottomenu e fa apparire il menu principale Field Service Mode.
Cierra el submenú. El menú Field Service Mode aparece.
Press </>: remote control; Vol. +/- : TV keyb.

Tube type

Define the right tube after changing the NVM. 6 characters
New type tube values (with default video and geometry) are immediatly active
Variable geometry and video parameters are put into NVM when the Store feature is selected. See below tube list.

Definit le tube exact après changement de NVM.
Les nouvelles valeurs de tubes (avec video et géometrie) sont actives de suite.
Les paramètres de vidéo et de géométrie sont chargés en NVM lorsque STORE est sélectionné. Voir liste ci-dessous.

Den Bildröhrentyp auswählen.
Die Geometrie-und Videodefault Werte werden sofort in das NVM geladen.
Bildrohrauflistung : siehe unten.

Definire il tubo appropriato dopo aver cambiato il NVM; 6 caratteri I valori per il nuovo tipo di tubo (con video e forma di default) sono immediatamente attivi. I parametri per video e forma variabili vengono immess i nel NVM quando viene selezionata la funzione Store. Si veda la lista dei tubi riportata sotto.

Definir el tubo correcto después de haber cambiado el NVM.6 caracteres.Los nuevos valores de tipo de tubo (con la vídeo y la geometría por defecto) se activan inmediatamente. Los parámetros variables de geometría y vídeo se graban en el NVM al seleccionar la función Store. Vea más arriba la lista de tubos.

Default tube type :
100Hz A66EGW 48X322 : A66EGW
4/3 28"MP, invar, vector gun, BSVM

→ After setting → Store (+) ☑

TUBE NAME	LIST	DESCRIPTION	tube type
A66EGW 48X322	A66EGW	4/3 28" MP, invar,vector gun, BSVM	10,100Hz
A59EGD048X322	A59EGD	4/3 25" SF,invar,vector gun, BSVM	11,100Hz
A68EGD038X322	A68EGD	4/3 29" SF, invar,vector gun, BSVM	12,100Hz
A68EES038X322	A68EES	4/3 29" SF , invar, COTY MDF gun, BSVM	12,100Hz
W66EGV023X122	W66EGV	16/9 28" SF , invar , vector gun , BSVM	13,100Hz
W76EGV023X122	W76EGV	16/9 32"SF, invar , vector gun, BSVM	14,100Hz
W76EGX023X122	W76EGX	16/9 32"SF, invar , COTY MDF gun , BSVM	14,100Hz

SETUP

Return
Closes the submenu and the main Field Service Mode menu appears.
Retourne au menu principal.
Verlassen des Untermenüs
Chiude il sottomenu e fa apparire il menu principale Field Service Mode.
Cierra el submenú. El menú Field Service Mode aparece.
Press </>: remote control; Vol. +/- : TV keyb.

OSD Position
Adjusts the position of all Megatext OSD.
Horizontale zentrierung des OSD.

PIN Erase Erases all PINs.
☑ PIN active-Pin aktiv
☐ No PIN active-Kein PIN
Selection : Long press: ≈ 5s
Press </>/OK: remote control;Vol. +/- :TV keyb.
Löschen des PIN Code durch längeres (≈ 5s) drücken der Taste >oder<.
Automatically stored

Clear Prog.
Clears all programms stored in the memory.
Analogues values SOUND PICTURE : factory values.
Return the TV to "out of factory mode.
Selection : Long press:2,5s

Efface tous les programmes mémorisés.
valeurs SON et IMAGES: valeurs usines.
Pour sortir des valeurs usine :
Selection : Long press:2,5s

Setzt das Gerät in die Werksgrundeinstellungen.
Es erscheint nach dem erneuten.
Einschalten das Installationsmenü.

Clear Prog.
Cancella tutti i programmi in memoria.Valori analogici SUONO IMMAGINE:valori di fabbrica.
Riportare la TV al modo Selezione: pressione prolungata: 2,5 sec.

Programa de borrado.
Borra todos los programas almacenados en la memoria.Valores análogos de SOUND PICTURE: valores de fábrica.Regreso a la TV para "salir del modo fábrica".Selección: Presión larga igual a 2,5 s.

☑ active-aktiv ☐ No active-inaktiv

Standard "Pan-Euro" or "I".
BG PAL SECAM,L SECAM (France),
DKK' SECAM,NTSC M,I PAL (UK/IRELAND)

WSS Detection "auto-surround" and "format" via Teletext line 23.
Selection of WSS Processing is valid for all programs.
Sélection du process WSS valid pour tous programmes

WSS (nur bei 16:9 oder Dolby)
Auswertung der Zeile 23 zur automatishen Format-umschaltung und Dolby-umschaltung

Rivelazione "auto-surround" e "format" via televideo alla riga 23.La selezione di WSS Processing vale per tutti programmi.
La selezione di WSS Processing vale per tutti programmi.

Detección "auto-surround" y "format" a través de la línea 23 de Teletext.La selección del procesamiento WSS es válida para todos los programas.La selección del procesamiento WSS es válida para todos los programas.

☑ detect.enable- aktiv ☐ disable-inaktiv

SETUP

Text. Lang. Teletext language :

0	1	2	3
English	Polish	English(US)	English
German	German	German	German
Swedish	Swedish	Swedish	Swedish
Italian	Italian	Italian	Italian
French	French	French	French
Portug.	Serbocroat	Portug.	Portug.
Czech/Slov.	Czech/Slov.	Czech/Slov.	Turkish.
-	Rumanian	English(UK).	-

EXT.HIFI / Dolby Ext.

Dolby Internal Not available on Normal Sound TV's
Nur bei Dolby TV.
☑ Dolby with External Loudspeaker.
Dolby mit ext.Lautsprechern
☐ Dolby with Internal Loudspeakers.
Dolby mit int. Lautsprechern

External HIFI Not available on Dolby TV's
Bei nicht Dolby TV
☑ External HIFI control
Einstellung der Lautstärke int.Lautsprecher
☐ Normal sound control
Einstellung der Lautstärke der Cinchbuchsen (HIFI Anlage)

IR Download

Download screen for receiving mapping via IR data.

Ecran de chargement pour réception "mapping" via IR data

Herunterladen des Programmschemas per IR.

Trasferimento IR
Trasferire schermo per ricezione mappatura via dati IR

Descarga de IR
Pantalla de descarga para recibir el mapeado a través de los datos IR.

IR Download
Programme 00
Return / Abort ◁
IR Download active

"programme 00" : function is active or finished.
Return / Abort : To exit/Abort the menu press "left" arrow key or Volume - key of keyboard.

All other IR commands have no response.

Toutes les autres commandes IR sont sans réponse;

Es gibt auf IR Kommandos keine Reaktion.

Tutti gli altri comandi IR sono senza risposta

Los otros comandos IR no envían respuesta.

→ After setting → Store (+) ☑

GEOMETRY

Return
Closes the submenu and the main Field Service Mode menu appears.
Retourne au menu principal.
Verlassen des Untermenüs
Chiude il sottomenu e fa apparire il menu principale Field Service Mode.
Cierra el submenú. El menú Field Service Mode aparece.
Press </>: remote control; Vol. +/- : TV keyb.

System Voltage
Adjustment of the system voltage Usys.
Only possible via the local keyboard Vol +/- .
Einstellung nur über die Bordbedienung möglich (Lautstärke +/-)

TUBE NAME	DESCRIPTION	Usys
A66EGW 48X322	4/3 28" MP	134V +/- 0.5V
A59EGD048X322	4/3 25"SF	137V +/-0.5V
A68EGD038X322	4/3 29" SF	137V +/-0.5V
A68EES038X322	4/3 29" SF	137V +/- 0.5V
W66EGV023X122	16/9 28" SF	134V +/- 0.5V
W76EGV023X122	16/9 32"SF	134V +/-0.5V
W66EGV023X122	16/9 32"SF	134V +/- 0.5V

H-VCO Horizontal - VCO oscillator.
Adjust H_VCO until the speed of the unsynchronised picture gets the slowest.
Agir sur H-VCO pour obtenir une image la plus proche de la synchronisation
Den H-VCO auf Schwebung einstellen.
Regolare l'H_VCO finché l'immagine non sincronizzata non avrà raggiunto la velocità minima.
Ajuste H_VCO hasta que la imagen no sincronizada alcance su velocidad más baja.
default value = 0FH
Press </>: remote control; Vol. +/- : TV keyb.

H-Delay 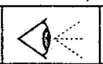 Horizontal delay Use "+" and "-" to adapt the image

V-Blanking
1-V-amp. pre-align: > 7% overscan
2- Reduce V-blanking: visible on top & bottom
3-Increase step/step:blank. at the bottom and cut- off lines at the top disappear
4- Increase one more step
5- Fine adjust V-amp. and V-position

1-V-amp. ampl.vertic. suffisante (>7% overscan)
2- réduire V-blanking:visible en haut et bas.
3-Agir étape par étape jusqu'à disparition du blanking en bas d'image et des lignes de cut-off en haut d'écran
4- Augmenter d'une valeur.
5- Faire un réglage fin de V-amp. et V-position

1-V-Position und V-Amplitude optimal einstellen (V-amp. vorabgleich: >7% Überschreibung.)
2- V-Blank soweit verändern, daß am oberen und unterern Bildrand gerade eine Austastung sichtbar wird.
3-Den Wert von-Blank um 2 steps erhöhen (2 x die + Taste drücken).

1- Ampiezza verticale: grande a sufficienza (7% di sovrascanzioni)
2- Riduzione della soppressione verticale: visibile in alto e in basso
3- Aumentare passo/passo: vuoto in basso per veder scomparire le linee di interdizione in alto
4- Aumentare ancora di un passo
5- Regolare con precisione l'ampiezza e la posizione verticali

1- Amplitud V: suficientemente grande (7% de sobreexploración)
2- Reducir el parpadeo V: visible en las partes superior e inferior.
3- Aumentar el paso a paso: el vacío en la parte inferior y las líneas de corte en la parte superior desaparecen.
4- Aumentar de otro paso.
5- Ajustar finamente la amplitud V y la posición V.

V-Amplitude
V-Position
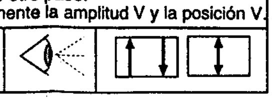

→ After setting → Store (+) ☑

GEOMETRY

V-Linearity
H-Position
H-Amplitude
EW - Amplitude
EW - Trapezium
EW -Shape

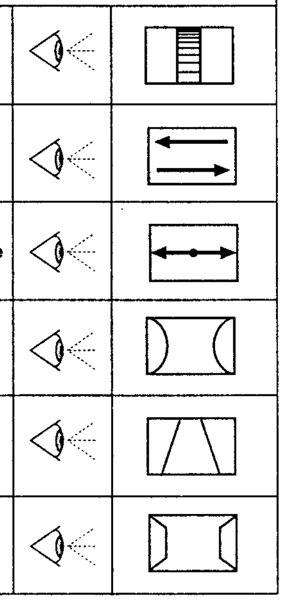

GEOMETRY ZOOM0
Δ
Default ☐
Store ☑
Restore ☐
Δ UP ∇ DOWN ◁▷ CHANGE

page 3

→ After setting → Store (+) ☑

VIDEO PAL

Return
Closes the submenu and the main Field Service Mode menu appears.
Retourne au menu principal.
Verlassen des Untermenüs
Chiude il sottomenu e fa apparire il menu principale Field Service Mode.
Cierra el submenú. El menú Field Service Mode aparece.
Press </>: remote control; Vol. +/- : TV keyb.

Normalise User Settings
Recalls the factory settings for colour, brightness, contrast and sharpness and sets contrast expand to "low".
☑ Factory settings recalled
☐ User settings kept.

G2 Alignment
Display a special menu:
Adjust R-Cut off and G-Cut off to 80H temporary.

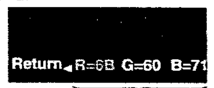

RGB cutoff counters

Adjust the lowest value with SCREEN potentiometer to: see table
Es erscheint folgendes Menu. Die R-und G-Cut off Werte für diese Einstellung temporär auf 80H einstellen. den kleinsten angezeigten Wert mit dem Schrmgitterensteller auf entsprechenden. wert in der Tabelle abgleichen.

Tube Type	Value	Tube Type	Value
A66EGW	60H	W76EGX	60H
A59EGD	50H	A80EDM	60H
A68EGD	50H	A90AFF	50H
W66EGV	50H	RP 4 / 3	-
W76EGV	60H	RP 16 / 9	60H

To return video submenu:
Press </>/OK: remote control;Vol. +/- :TV keyb.
Select"Restore" to restore the cut off values.

R-Cut off* / **G-Cut off*** — ☼+◐+◑=nom. Grey scale test pattern white =100%

R - Drive / **G - Drive** / **B - Drive** — ☼+◐+◑=nom. Grey scale test pattern white =100%

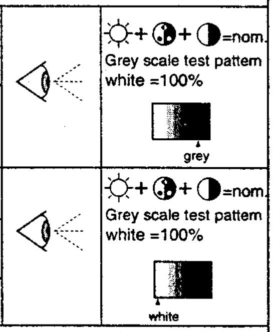

Peak-White** — ☼+◑+◐=nom. Peek white test pattern white =100%

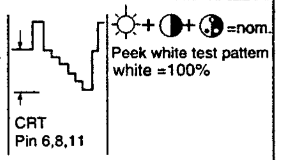

Blue cathode / Blue cathode

Tube Type	[init]	[Vpp]	Tube Type	[init]	[Vpp]
A59EGD	470	110	A90AFF		
A66ECY	350	110	W66EGV	550	110
A66EGW	425	110	W76EGV	430	110
A68EGD	400	110	W76EGX	430	110
A80EDM					

VIDEO PAL

Scal. Brightness — ☼+◐ = 50%, ◑ = 100%. Grey scale test pattern white =100%

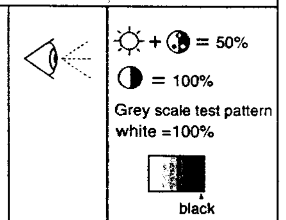

Scal*. Colour — ☼+◐+◑=nom.
PAL (then SECAM +RGB) 75% Colour bar test pattern via RF.

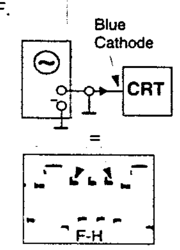

Scal. Contrast — factory settings.

Text Set-up Mode — ☼+◐+◑=nom.
Set Text Contr. to max. !
Adjust Text Gain to get a light output of just ≥40% of OMA peak withe.
Fine-adjust with Text Contr. to 40% of light output of OMA Peak White.

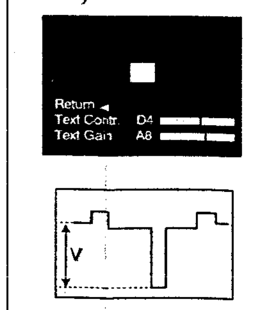

CRT Pin 6,8,11

Note :
* adjust separate for PAL/NTSC/SECAM and RGB/AV
getrennte Einstellung für PAL/SEACAM und RGB/AV
* * After PEAK white adjustment control cut off setting. Repeat the adjustments if necessary.
nach der Einstellung von Peak white die Cut off Einstellungen wiederholen

→ After setting → Store (+) ☑

VIDEO	PAL
Scal.Brightness -1A	
Scal. Colour +24	
Scal. Contrast -1F	
Text Setup Mode ▷	
Default	☑
Store	☑
Restore	☑
UP ▽ DOWN	◁▷ CHANGE

ERROR CODE	
Return	
Erase Error Codes	◁▷ ☑
CODE	
11	013AF
24	008A0
78	0042A
11	0023F
51	000E3
UP ▽ DOWN	◁▷ CHANGE

page 2

displayed opposite the displayed opposite the menu title.

VIDEO		PAL
Scal. Brightness		☼+◑ = 50% ◑ = 100% Grey scale test pattern white =100% black
Scal*. Colour		☼+◑+◑ =nom. PAL (then SECAM +RGB) 75% Colour bar test pattern via RF. Blue Cathode CRT F-H
Scal. Contrast	factory settings.	
Text Set-up Mode		☼+◑+◑ =nom. Set Text Contr. to max. ! Adjust Text Gain to get a light output of just ≥40% of OMA peak withe. Fine-adjust with Text Contr. to 40% of light output of OMA Peak White. Return Text Contr. D4 Text Gain A8 V CRT Pin 6,8,11

Note :
* adjust separate for PAL/NTSC/SECAM and RGB/AV
getrennte Einstellung für PAL/SEACAM und RGB/AV
* * After PEAK white adjustment control cut off setting.
Repeat the adjustments if necessary.
nach der Einstellung von Peak white die Cut off Einstellungen wiederholen

→ After setting → Store (+) ☑

ERROR CODE

Return

Closes the submenu and the main Field Service Mode menu appears.

Retourne au menu principal.

Verlassen des Untermenüs

Chiude il sottomenu e fa apparire il menu principale Field Service Mode.

Cierra el submenú. El menú Field Service Mode aparece.

Press </>: remote control; Vol. +/- : TV keyb.

Erase Error Codes Clears all error codes storedin the NVM.Long press action (2.5s) :
Durch längeres Drücken der >oder< Taste werden die Error Codes gelöscht.
Press </>/OK: remote control;Vol. +/- :TV keyb.

CODE LED Error Codes

Store the last five different error codes when each occured (via runtime counter) .The more recent error is displayed on top.A repeat of the error code on the top of the list just updates the runtime. 27 different error codes are signalled from the TV LED :11 to 44.
The error code is signalled as two separate digits with a suitable pause in-between and will repeat until the TV is fixed or fixes itself.

e.g. Error-code : 23 will be displayed :
2 flashes, short pause
3 flashes, long pause .....
List of Errors Codes : see table

Mémorise les cinq derniers codes erreurs et affiche en haut d'écran les plus récents.
27 codes erreurs différents sont signalés par 2 digits selon une séquence spécifique
Exemple :
Code erreur : 23 affiché
2 flashes, courte pause
3 flashes : longue pause
.....
Voir ci-contre la liste des codes erreurs

Zeigt die letzen 5 Fehlercodes mit der Laufzeit an. Der zuletzt aufgetretene Fehler steht an erster Stelle.
Sollte ein Fehler wiederholt auftreten wird nur die Laufzeit aktualisiert.
Die Fehlercodes können im Menü Error Code angezeigt werden oder über die Kontroll LED angezeigt werden;

Beispiel für die Anzeige über die Kontroll LED :

Fehlercode 23
Zweimaliges Blinken der LED, kurze Pause
Dreimaliges Blinken der LED, lange Pause.
Auflistung der Fehlercodes : siehe Liste

Memorizzare gli ultimi cinque codici d'errore (differenti tra loro) dopoche ognuno di essi si sarà presentato (attraverso il contatore della durata di esecuzione). L'errore più recente viene visualizzato in cima. La ripetizione del codice di errore in cima alla lista non farà altro che aggiornare la durata di esecuzione.Dal LED della TV vengono segnalati 27 codici d'errore differenti, numerati da 11a 44. Il codice d'errore è indicato da due cifre separate da un opportuno intervallo di tempo e verrà ripetuto fino a quando il televisore non sarà stato riparato o non si sarà corretto da solo. Ad es:
Il codice d'errore 23 visualizzerà:
2 segnali luminosi con pausa breve
3 segnali luminosi con pausa lunga
Per la lista dei Codici d'Errore, si veda la tabella

Almacene los últimos cinco códigos de error cuando cada uno ocurre (gracias al contador de tiempo de ejecución). El error más reciente se visualiza en la parte superior. Una repetición del código de error en la parte superior de la lista solamente actualiza el tiempo de ejecución El indicador TV LED indica 27 códigos de error diferentes: de 11 a 44. El código de error se señala en forma de dos dígitos separados con una pausa apropiada entre los dos y se repetirá hasta que repare el TV o él se repara a sí mismo
Por ejemplo,Se va visualizar el código de error 23:
2 parpadeos, una pausa corta;
3 parpadeos, una pausa larga.
Para la Lista de códigos de error, consulte la tabla.

ERROR CODES

GB

11 1st Audio_MSP doesn't answer
12 2nd Audio-MSP doesn't answer
13 Audio-DSP doesn't answer
14 Video IC STV2161/2 doesn't answer
15 Chroma IC 2151/9143 doesn't answer
16 Upconverter DMU0 doesn't answer
17 Audio (or Dolby) module not detected
18 SCART IC TEA6415C doesn't answer
19 Tuner CTT5000 doesn't answer
21 I2C Bus1 data line held low
22 I2C Bus2 data line held low
23 I2C Bus1 clock line held low
24 I2C Bus2 clock line held low
25 Switched 5V not available
26 Tube doesn't gets warm in time
27 Deflection detects >3 times protection (problem detected on "breathing" line)
29 DRAM memory of Megatext defect
33 The PSI chip (STV2165) doesn't answer
34 The NVM (X24C32) chip doesnt answer
35 13V not available
37 Unexpected level on NMI (Interrupt) line found (possible cause : tube flashover)
38 M3LBus for Megatext is blocked
39 Megatext (SDA5273) doesn't answer
41 bus1 (data line) not recoverable
42 bus2 (data line) not recoverable
43 MCU (Motion Mastering Up-Converter) doesn't answer
44 Convergence IC (Rear Projector) doesn't answer

F

11 Processeur Audio MSP ne répond pl
12 Deuxième MSP ne répond plus (Dolt
13 Audio-DSP ne répond plus (produit D
14 Video-IC STV2161 ou 2162 ne répor
15 Chroma-IC STV2151 ou TDA9143 ne d plus
16 Convertisseur de frequence d'image DMU0 (Intelligent Mastering) ne répond plus
17 Module son (ou Dolby) n'est pas dét
18 Commutateur SCART TEA6415C ne d plus
19 Tuner CTT5000 ne répond plus
21 I2C-bus 1 data bloqué au niveau bas
22 I2C-bus 1 clock bloqué au niveau ba
23 I2C-bus 2 data bloqué au niveau bas
24 I2C-bus 2 clock bloqué au niveau ba
25 Le "5V commuté" n'est pas disponibl
26 Tube ne chauffe pas a temps
27 Plus que 3-fois la déflection a détecte "protection" (c'est-a-dire qu'il y a un pe détecté sur la ligne "breathing")
29 Mémoire (DRAM) du Megatext est er
33 STV 2165 (PSI 100Hz) ne répond pl
34 NVM (mémoire) X24C32 ne répond p
35 +13V n'est pas disponible
37 Problème détecté sur la ligne "Interrndant le démarrage ou le fonctionnement Possibilité: "arking"?
38 Bus M3L pour Megatext est bloqué
39 Megatext (SDA5273) ne répond plus
41 I2C-bus 1 data reste blocqué
42 I2C-bus 2 data reste blocqué
43 MCU (convertisseur de frequence d'idigital: Motion Mastering) ne répond plus
44 CI Convergence ne répond plus (rétrcteur)

D

11 Audio MSP Prozessor antwortet nicht.
12 Zweiter Audio MSP Prozessor antwortet nicht.(Dolby)
13 Audio DSP Prozessor antwortet nicht. (Dolby)
14 IC STV2161/62 antwortet nicht
15 IC STV2151 / TDA9143 antwortet nicht
16 DMU0 Upconverter (Videomodul) antwortet nicht
17 Audio- oder Dolby-modul nicht erkannt
18 TEA6415C antwortet nicht (SCART Schalter)
19 Tuner CTT5000 antwortet nicht
21 I2C Bus1 data line ist auf low
22 I2C Bus2 data line ist auf low
23 I2C Bus1 clock line ist auf low
24 I2C Bus2 clock line ist auf low
25 Geschaltete 5V nicht vorhanden
26 Röhre wird nicht rechtzeitig warm
27 Ablenkung meldet 3 mal Fehler. (Problem auf Breathing Leitung)
29 DRAM des Megatext defekt
33 STV 2165 (PSI 100Hz) antwortet nicht
34 NVM Chip antwortet nicht (X24C32)
35 +13V nicht vorhanden
37 Unerwarteten Zustand an NMI (Interrupt) line gefunden. (Mögliche Urasache = Röhren Überschlag")
38 M3L Bus des Megatext blockiert
39 Megatext (SDA 5273) antwortet nicht
41 Bus1 (data line) nicht möglich zu reaktivieren
42 Bus2 (data line) nicht möglich zu reaktivieren
43 MCU (Motion Mastering Up-Converter) antwortet nicht
44 Konvergenz IC antwortet nicht (Rear-Projektor)

I

11 Primo Audio MSP non risponde piú
12 Secondo Audio MSP non risponde p
13 Audio DSP non risponde piú
14 2161/2 non risponde piú
15 2151/9143 non risponde piú
16 Il convertitore non risponde piú
17 Modulo Audio non trovato
18 TEA6415C non risponde piú
19 Il sintonizzatore non risponde piú
21 Linea I2C bus dati 1 mantenuta bas
22 Linea I2C bus dati 2 mantenuta bas
23 Linea I2C bus temporizzatore 1 man bassa
24 Linea I2C bus temporizzatore 2 man bassa
25 Commutazione 5V non disponible
26 Il tubo non si riscalda in tempo
27 La deflezion ha rilevato piú
29 Difetto alla DRAM di Megatext
33 Il chip PSI non risponde piú
34 Il chip NVM non risponde piú
35 13V non dispcnible
37 Livello imprevisto sulla linea NMI
38 Bus M3L per Megatext bloccato
39 Megatext non risponde piú
41 Bus 1 (linea dati) non ripristinabile
42 Bus 2 (linea dati) non ripristinabile
43 MCU non risponde
44 Convergenza IC non risponde

E

11 Procesador de audio MSP no responde
12 Segundo MSP no responde (Dolby)
13 Audio DSP no responde
14 Cir. integrado de video STV2161 ó 2162 no responde
15 Cir. integrado croma ST2151 ó TDA9143 no responde
16 Convertidor de frecuencia de imagen digital DMU0 (Mastering Inteligente) no responde
17 Módulo de sonido (o Dolby) no se detecta
18 Conmutador Scart (TEA6415C) no responde
19 Tuner CTT5000 no responde
21 Data 1 del bus I2C permanece en bajo
22 Clock 1 del bus I2C permanece en bajo
23 Data 2 del bus I2C permanece en bajo
24 Clock 2 del bus I2C permanece en bajo
25 No se dispone de los "5v conmutados"
26 El tubo tarda en calentarse
27 La protección de la deflexión actúa mas de 3 veces (el problema se detecta en la línea de "breathing")
29 La memoria DRAM del Megatext está defectuosa
33 El chip STV2161 (PSI 100Hz) no nde
34 La memoria no volátil X24C32 no nde
35 No están disponibles los + 13 v.
37 Problema detectado en la línea "pt" durante el arranque o el funcionao del TV.Posibilidad de chispazos y alta?
38 El bus M3L para el Megatext estueado
39 Megatext (SDA5273) no respond
41 Data 1 del bus I2C permanece bado
42 Data 2 del bus I2C permanece bado
43 MCU (convertidor de frecuencia agen digital: Motion Mastering) no res
44 Cir. integrado de covergencia no nde (retroproyectores)

GEOMETRY MODE ALIGNMENT - 100Hz VERSION

4/3 picture tube

Signal : 4/3 test pattern

4 / 3 standard mode zoom 0		**100Hz Version** : overscan V=107% , H=107% 1- Adjust Vertical position and Vertical amplitude 2- Adjust Vertical Blanking and linearity 3- Adjust Horizontal position and Horizontal amplitude 4-Adjust EW Amplitude ,EW Shape and Trapezium
<4/3> zoom 1		**100 Hz Version** : overscan V=120% , H=120%
16 / 9 standard mode zoom 0		Adjust the vertical height until V = 80%
<16 / 9> zoom 1		Adjust the vertical height : V =90%

16/9 picture tube

Signal : 4/3 test pattern

16 / 9 standard mode zoom 0		**100Hz Version** : overscan V=107%, H =107% 1- Adjust Vertical position and Vertical amplitude 2- Adjust Vertical Blanking and linearity 3- Adjust Horizontal position and Horizontal amplitude 4-Adjust EW Amplitude ,EW Shape and Trapezium

MAIN BOARD - PLATINE PRINCIPALE - CHASSIS GRUNDPLATTE - PIASTRA PRINCIPAL - PLATINA PRINCIPAL

COMPONENT SIDE - COTE COMPOSANTS - BESTÜCKUNGSSEITE - LATO COMPONENTI - LADO COMPONES

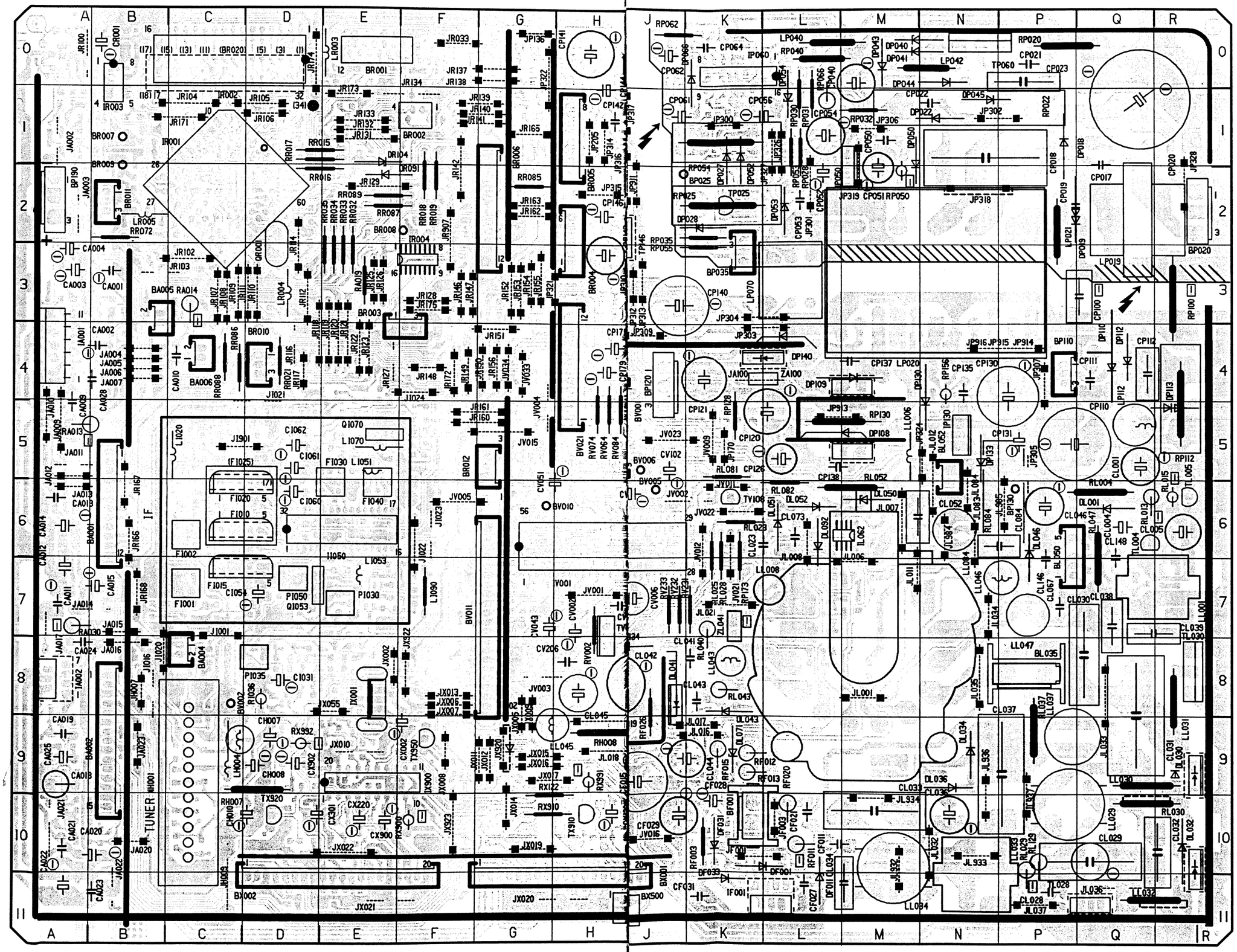

SOLDER SIDE

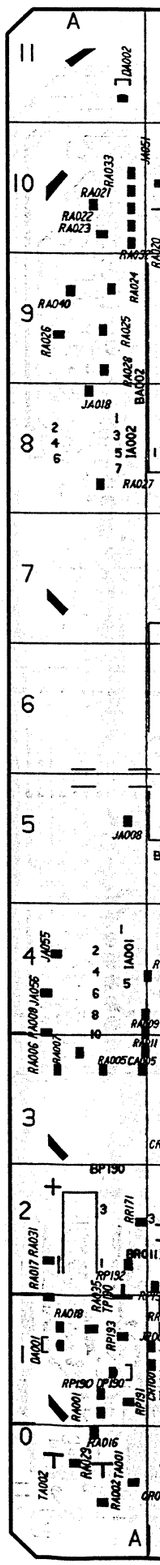

SOLDER SIDE - CÔTE SOUDURES - LÖTSEITE - LATO SALDATURE - LADO SOLDADURAS

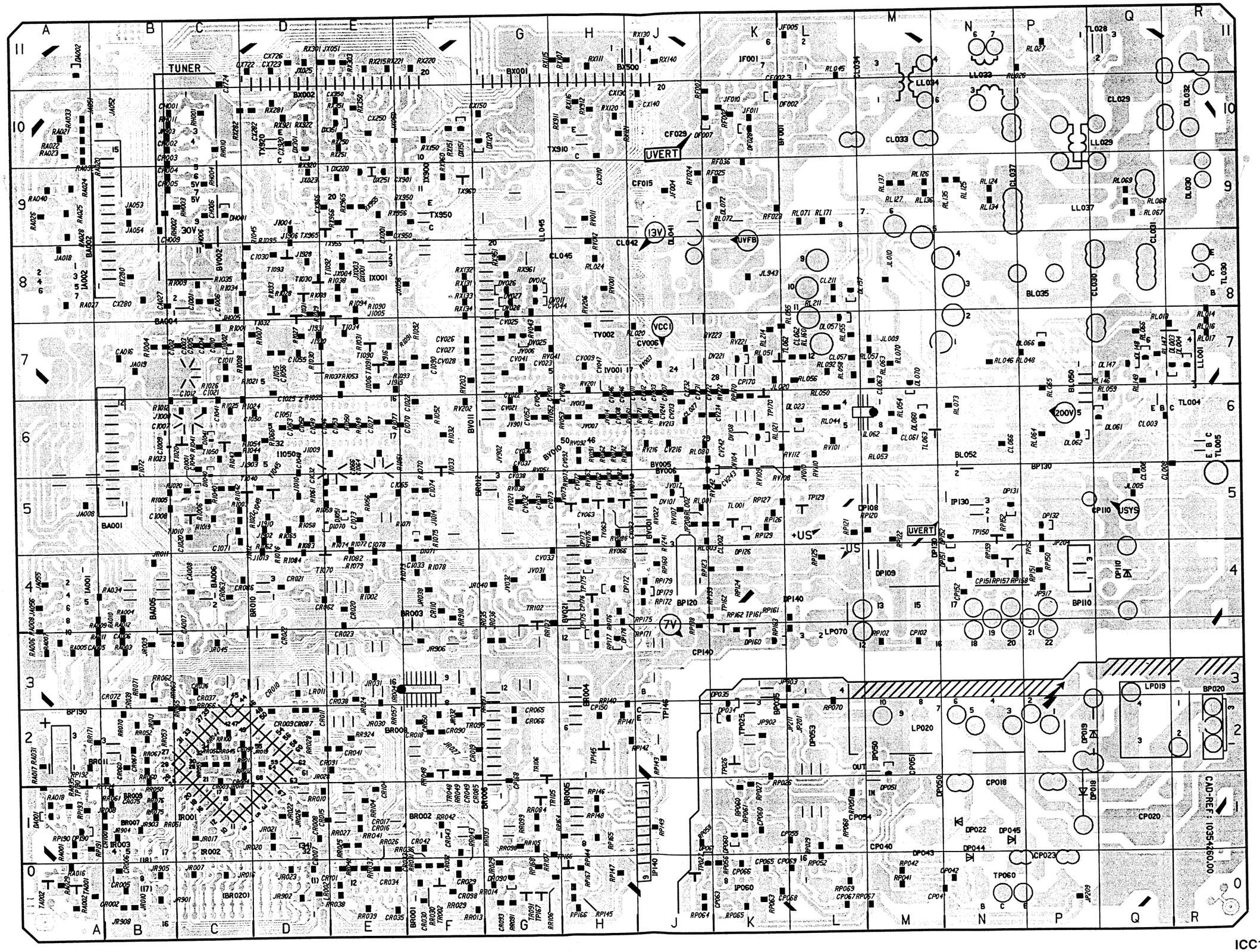

ICC19 100 Hz
First issue 09 / 97

COMPONENTS LOCATION - LOCALISATION DES ELEMENTS - LAGE DER BAUTEILE - LOCALIZZAZIONE DEGLI ELEMENTI - LOCALIZACION DE LOS COMPONENTES

* SOLDER SIDE - COTE CUIVRE - LÖTSEITE - LATO SALDATURE - LADO DEL COBRE

1 2 3

BA001	B6
BA002	B9
BA004	C8
BA005	B3
BA006	C4
BF001	K10
BL035	P8
BL050	P6
BL052	N5
BP020	R2
BP025	J2
BP035	K3
BP110	P4
BP120	J4
BP130	P6
BP190	A2
BR001	E0
BR002	F1
BR003	F4
BR004	H2
BR005	H1
BR006	G2
BR007	B1
BR008	F2
BR009	B2
BR010	D4
BR011	B2
BR012	G5
BV001	J5
BV002	C8
BV005	J6
BV006	J5
BV010	G6
BV011	G7
BV021	H4
BX001	H11
BX002	E11
BX500	J11

CA001	B3
CA002	B4
CA003	A3
CA004	A3
CA005*	B3
CA006*	B3
CA007*	C 3
CA008*	C 4
CA009	A 5
CA010	C 4
CA011	A 7
CA012	A 7
CA013	A 6
CA014	A 6
CA015	B 7
CA016*	B7
CA018	A9
CA019	A9
CA020	B10
CA021	A10
CA022	A11
CA023	B11
CA024	A8
CA025	A9
CA027*	C8
CA028	B4
CF002*	K10
CF011	L10
CF015	J9
CF021	L10
CF027	L11
CF028	K10
CF029	J10
CF031	K11
CH001*	C10
CH002*	C10
CH003*	C10
CH004*	C9
CH005*	C9
CH006*	C9
CH007	D9
CH008	D9
CH009*	B9
CH010	D10
CI001*	C8
CI002*	B7
CI003*	C7
CI004*	C7
CI005*	C7
CI006*	C8
CI007*	B6
CI008*	C5
CI009*	C6
CI010*	C7
CI011*	C7
CI012*	C6
CI020*	C5
CI021*	C6
CI022*	F6
CI025*	D7
CI030*	D8

CI031	D8
CI032*	E5
CI033*	F4
CI040*	C6
CI041*	C6
CI045*	D5
CI046*	E6
CI048*	D6
CI049*	D6
CI050*	D6
CI051*	D6
CI052*	D6
CI053*	E6
CI054	D7
CI055*	D7
CI056*	D7
CI060	D6
CI061	D5
CI062	D5
CI063*	D6
CI064 *	E5
CI065*	E5
CI066*	E5
CI070*	F6
CI071*	C5
CI072*	B6
CI073*	E5
CI074*	F5
CI077*	E6
CI078*	E4
CI090*	F7
CL001	Q5
CL002*	K5
CL003*	Q6
CL004	Q6
CL005	R6
CL006*	Q5
CL008*	R5
CL023	L6
CL027*	J6
CL028	P11
CL029	Q10
CL029	Q10
CL030	Q8
CL031	Q8
CL032	R10
CL033	M10
CL034	M11
CL036	N10
CL037	P9
CL038	Q7
CL039	R7
CL041	K8
CL042	J8
CL043	K8
CL044	K9
CL045	H8
CL046	P6
CL052	M6
CL057*	L7
CL061*	M6
CL062*	L7
CL063*	M7
CL066*	N6
CL067	P7
CL073	L6
CL084	P6
CL146	P6
ICL148	Q6
CL211*	L8
CP017	Q1
CP018	N1
CP019	Q 2
CP020	Q 1
CP020	Q1
CP021	P0
CP022	N1
CP023	P0
CP040	M0
CP041*	N0
CP042*	N0
CP050	M1
CP051	M2
CP052	L2
CP053	L2
CP054	L1
CP055*	L1
CP056	L1
CP060*	K1
CP061	J1
CP062	J0
CP063*	J0
CP064	K0
CP065*	K0
CP066*	K0
CP067*	L0
CP068*	K0
CP069*	L0
CP100	P3
CP100	Q3
CP102*	M3
CP110	P5
CP111	Q4
CP112	Q4
CP120	L5

CP121	K4
CP126	L5
ICP130	P4
CP131	P5
CP135	N4
CP137	M4
CP138	L5
CP140	J3
CP141	H0
CP142	H1
CP143	H 3
CP144	H1
CP146	H2
CP150*	H2
CP151*	N4
CP152*	N4
CP168*	G1
CP170*	K6
CP171	H4
CP176*	H4
CP179	H4
CR001	B0
CR002*	A0
CR003*	C2
CR004*	C2
CR005*	B0
CR006*	B0
CR007*	D0
CR008*	D1
CR009*	D2
CR010*	D2
CR011*	D2
CR015*	D1
CR016*	E1
CR017*	E1
CR018*	F2
CR019*	F2
CR020*	E4
CR021*	D4
CR022*	D3
CR023*	E4
CR029*	F0
CR030*	F0
CR032*	F0
CR033*	E0
CR034*	E0
CR035*	E0
CR036*	C3
CR037*	C3
CR038*	E3
CR039*	B2
CR041*	E2
CR042*	F1
CR043*	F1
CR049*	F2
CR050*	F2
CR060*	B2
CR062*	D4
CR063*	C4
CR065*	G2
CR066*	G2
CR067*	B2
CR072*	B3
CR075*	B1
CR085*	F2
CR086*	C4
CR087*	D2
CR090*	F2
CR091*	E2
CR092*	C2
CR093*	G0
CR098*	F0
CR100*	B1
CR101*	E0
CR104*	E1
CR110*	F4
CV002	H7
CV003	J6
CV006	J7
CV007*	J6
CV008*	H 6
CV009*	H7
CV011*	J6
CV012*	J6
CV021*	G6
CV022*	G7
CV023*	G7
CV025*	G7
CV026*	F7
CV027*	F7
CV028*	F7
CV031*	G5
CV032*	G5
CV033*	G4
CV036*	G6
CV037*	G6
CV038*	G6
CV041*	G7
CV042*	G6
CV043	G7
CV044*	G8
CV046*	H6
CV047*	H6
CV048*	H7
CV051	H6

CV052*	G6
CV062*	H5
CV063*	H5
CV072*	H5
CV073*	H5
CV082*	H5
CV083*	H5
CV092*	H6
CV102	J5
CV103	J6
CV201*	H6
CV206	H8
CV207	H7
CV213*	J6
CV216*	J6
CV222*	K6
CV231*	J6
CV232*	J6
CV234*	K6
CV241*	J6
CV242*	K6
CV243*	K5
CV246*	H6
CX001*	E9
CX002	F9
CX120	H10
CX130*	J10
CX140*	J10
CX150*	G10
CX220	E10
CX250*	E10
CX280*	B8
CX282*	D10
CX301	D10
CX350*	E10
CX722*	D11
CX723*	D11
CX724*	C11
CX726*	D11
CX900	E10
CX901*	F9
CX902	D9
CX910*	H10
CX920*	D10
CX950*	F9
CX965*	E9

DA001*	A1
DA002*	A11
DF001	K10
DF002*	K10
DF007*	K10
DF011	L11
DF028*	K10
DF031	K10
DF033	K11
DH001*	C9
DI001*	C5
DI002*	C 7
DI040*	C6
DI041*	C6
DI051*	E5
DI070*	E5
DI071*	F5
DL001	Q6
DL003*	R7
DL004*	R7
DL023*	L6
DL030*	R9
DL030	R9
DL032*	R10
DL032	R10
DL032	R11
DL034	N9
DL036	N9
DL041*	J8
DL041	J8
DL043	K8
DL046	P6
DL050	M6
DL051	L6
IDL052	L6
DL057*	L7
DL060*	M6
DL061*	Q6
DL062*	P6
DL066*	P7
DL070*	M7
DL071	K9
DL072*	K9
DL092	L6
DL147*	Q7
DL148*	Q7
DL157*	L8
DP018	P1
DP019	Q2
DP022	N1
DP027	K1
DP028	K2
DP034*	K 2
DP035	K2
DP040	N0
DP041	N0

DP043	M0
DP044	N0
DP045	N1
DP050	M1
DP051*	M2
DP052	K1
DP053	L2
DP054	L1
DP060*	K1
DP061*	J0
DP066	K0
DP108	L 5
DP108*	M5
DP108	M4
DP109*	M4
DP109	M4
DP110	Q4
DP112	Q 4
DP113	R5
DP126*	K5
DP130	N4
DP131*	N5
DP132*	P5
DP133	N5
DP134	J8
DP140*	L4
DP140	L4
DP151*	N4
DP152*	N5
DP160*	K3
DP172*	H4
DP173*	H4
DP175*	H3
DP178*	H3
DP179*	J4
DP190*	A1
DR090*	G0
DR091	E2
DR104	E1
DV011*	G8
DV012*	G8
DV025*	G7
DV026*	G8
DV027*	G8
DV028*	G8
DV101*	J5
DV104 *	K5
DV108*	K6
DV221*	K7
DX001*	E8
DX120	G10
DX151*	F10
DX220*	E9
DX251*	E9
DX301*	D10
DX351*	E10

FI001	C7
FI002	C6
FI010	C6
FI015	C7
FI020	C6
FI030	E6
FI040	E6

IA001	A7
IA001	A4
IA001	A8
IA002	A2
IF001	L11
II050	E6
IIL062*	M6
IP050	M1
IP060	K0
IP130	N5
IP140	J2
IP140	J1
IR001*	C2
IR001	C2
IR002*	C0
IR002	C0
IR003	B0
IR004*	F3
IR004	F3
IV001	H6
IX001*	E8
IX001	E8
IX900	E9

JA002	A1
JA003	A2
JA004	B4
JA005	B4
JA006	B4
JA007	B4
JA008	A5
JA009	A5

JA010	A5
JA011	A5
JA012	A5
JA013	A 6
JA014	B7
JA015	B7
JA016	B8
JA017	A7
JA018*	A 8
JA019	B7
IJA020	B10
JA021	A10
JA022	B11
JA023	B9
JA051*	A10
JA052*	B10
JA053*	B9
JA054*	B9
JA055*	A4
JA056*	A4
JA100	K4
JF001	K10
JF003	L10
JF004*	J9
JF005*	L11
JF010*	K10
JF011*	K10
JH005*	C8
JH006*	C8
JH007	B8
JH009	C11
JH903*	C 10
JI001	C7
JI004*	D9
JI005*	E7
JI006*	E7
JI008*	C6
JI009*	E6
JI010*	D5
JI012*	C5
JI013*	D5
JI014*	F5
JI015*	D7
JI016	B8
JI020	B8
JI021	D5
JI022	F6
JI023	F6
JI024	F 4
JI901	C5
JI902*	D5
JI903*	D6
JI906*	D8
JI910*	D5
JI915*	E7
JI916*	E7
JI928*	D8
JI930*	D7
JI931*	D8
JL001	M8
JL005*	Q 5
JL006	M7
JL007	M6
JL008	L6
JL009 *	M7
JL010*	M8
JL011	M7
JL012	N6
JL016	K9
JL017	K9
JL018	H9
JL019	H9
JL020 *	K 7
JL021	K7
JL032	N10
JL033	Q8
JL034	N7
JL035	N8
JL036	Q11
JL037	P11
JL083	N 6
JL084	N6
JL932	M10
JL933	N10
JL934	M10
JL936	N10
JL937	P10
JL943*	K8
JL984	N6
JL985	P6
JP136	G0
JP170	K5
JP201*	L2
JP204*	P5
JP205	H1
JP208*	J5
JP209*	P0
JP211*	K2
JP300	K1
JP301	L2
JP302	P1
JP303	L4
JP304	L3
JP305	P5
JP306	M1

JP307	P4
JP309	J4
JP310	H3
JP311	J3
JP312	J3
JP313	J3
JP314	H1
JP315	H2
JP316	H1
JP317	J1
JP318	N2
JP319	M1
JP321	H3
JP322	G0
JP324	N5
JP326	L1
JP327	L1
JP328	R2
JP902*	K2
JP903*	L3
JP910	J2
JP911	J2
JP913	L5
JP914	P4
JP915	P4
JP916	P4
JP917*	P4
JR007*	C0
JR008*	B1
JR009*	B3
JR017*	C1
JR018*	C1
JR019*	D 2
JR020*	D1
JR021*	D1
JR022*	D1
JR023*	D0
JR024*	E3
JR026*	D1
JR027*	F2
JR028*	E2
JR029*	G0
JR030*	E2
JR031*	E3
JR032*	F2
JR033	F0
JR035*	G3
JR036*	G3
JR038*	F4
JR040*	G4
JR045*	C3
JR100	A0
JR102	C3
JR103	B3
JR104	C1
JR105	D1
JR106	D1
JR107	C3
JR108	C3
JR109	C3
JR110	D3
JR111	D3
JR112	D3
JR114	D3
JR116	D4
JR117	D4
JR118	D4
JR119	E4
JR120	E4
JR121	E4
JR122	E4
JR123	E4
JR125	E3
JR126	E3
JR127	E4
JR128	F3
JR129	E2
JR131	E1
JR132	E1
JR133	E1
JR134	F1
JR137	G0
JR138	G0
JR139	G1
JR140	G1
JR141	G1
JR142	F2
JR146	F3
JR147	F3
JR148	F4
JR149	F4
JR150	G4
JR151	G4
JR152	G3
JR153	G3
JR154	G3
JR155	G3
JR156	G4
JR160	G5
JR161	G5
JR162	G2
JR163	G2
JR165	G1
JR166	B6
JR167	B6

JR168	B7
JR171	C1
JR172	F4
JR173	E1
JR174	D0
JR175	F3
JR901*	B0
JR902*	D0
JR903*	B1
JR904*	B1
JR905*	B0
JR906*	F3
JR907	F2
JR908*	B0
JV001	H7
JV002	K6
JV003	G8
JV004	G5
JV005	F6
JV006*	G7
JV007*	H6
IJV009	K5
JV010*	L5
JV011	K6
JV012	K6
JV013*	H6
JV014*	H6
JV015	G5
JV016	J10
JV017*	J5
JV021	K6
JV022	K6
JV023	J5
JV031*	G4
JV032*	G4
JV033	G4
JV034	G4
JV901*	G6
JV902*	G6
JX002	E8
JX003*	E8
JX004*	E8
JX005	G8
JX006	F8
JX007	F8
JX008	F9
JX009	G8
JX010	E9
JX011	G9
JX012	G9
JX013	F8
JX014	G10
JX015	G9
JX016	G9
JX017	G9
JX019	G10
JX020	H11
JX021	E11
JX022	E10
JX023*	E9
JX025*	D11
JX050*	E10
JX051*	E11
JX055	E8
JX056	F8
JX920	G9
JX922	F8
JX923	F10

LIH004	C9
LI020	C5
LI051	E5
LI053	E7
LI070	E5
LI090	F7
LL001	R7
LL006	M5
LL008	M8
LL029	P10
LL030	Q9
LL031	R8
LL032	R11
LL033	N11
LL034	M10
LL037	P9
LL043	K8
LL045	H9
LL046	P7
LL047	P7
LL084	N6
LP019	Q2
LP020	N3
LP021	P2
LP040	L0
LP042	N0
LP070	L3
LP112	Q5
LR002*	D0
LR003	E0
LR004	D3
LR005	B2
LR011*	D3

PI030	E7
PI035	D8
PI050	D7

QI053	D7
QI070	E5
QR001	D3

RA001*	A 1
RA002*	A0
RA003*	B3
RA004*	B4
RA005*	A 3
RA006*	A3
RA007*	A 3
RA008*	A 4
RA009*	B4
RA010*	B4
RA011*	B3
RA012 *	B4
RA013	A5
RA014	C3
RA016*	A0
RA017*	A1
RA018*	A1
RA019	E3
RA020*	A10
RA021*	A10
RA022*	A10
RA023*	A 10
RA024*	A9
RA025*	A9
RA026*	A9
RA027*	A 8
RA028*	A9
RA029*	A0
RA030	A7
RA031*	A2
RA032*	A 10
RA033*	A10
RA034*	B4
RA035*	A1
RA040*	A 9
RF002*	K10
RF003	K10
RF007*	K10
RF011	L10
RF012	K9
RF013	K9
RF015	K9
RF020	L10
RF023*	K9
RF024*	J9
RF025*	K9
RF026	J8
RF036*	K9
RH001*	C10
RH002*	C9
RH003*	C9
RH004*	C9
RH007	D9
RH008	H9
RH010*	C10
RH011*	C10
RI001*	C7
RI002*	E4
RI003*	C5
RI004*	B7
RI005*	C5
RI006*	C5
RI007*	D7
RI008*	C7
RI009*	C8
RI012*	C6
RI019*	C5
RI020*	C5
RI021*	D7
RI022*	C5
RI023*	C6
RI024*	C6
RI025*	C6
RI026*	C7
RI027*	D7
RI028*	D8
RI029*	E8
RI030*	E7
RI031*	E7
RI032*	F6
RI033*	D8
RI034*	C8
RI035*	D8
RI036	D8
RI037*	E7
RI038*	E8
RI039*	E8
RI040*	C5
RI041*	C6

RI042*	C5
RI043*	C6
RI044*	C6
RI045*	D8
RI049*	E6
RI050*	E6
RI051*	E6
RI052*	F6
RI053*	E 7
RI054*	C6
RI055*	E7
RI056*	E5
RI058*	D5
RI059*	E5
RI061*	E5
RI062*	D5
RI065*	D5
RI066*	D6
RI070*	F5
RI071*	F5
RI072*	E5
RI073*	E5
RI074*	E5
RI075*	F5
RI076*	D5
RI077*	E6
RI078*	F 4
RI079*	E4
RI082*	E5
RI083*	D5
RI084*	D4
RI090*	E8
RI091*	E7
RI092*	F7
RI093*	F7
RI094*	E8
RI095*	D8
RL001*	J5
RL002*	J5
RL003 *	J5
RL004	Q6
RL004	Q6
RL013	Q6
RL014	R7
RL015	R6
RL016*	R7
RL017*	R7
RL018*	R7
RL020*	J7
RL021*	K6
RL023	K6
RL024*	H8
RL025	K6
RL026*	P11
RL027*	P11
RL028	K6
RL029	P11
RL030	Q 10
RL030	Q10
RL037	P9
RL040	K8
RL043	K8
RL044*	L6
RL045*	L11
RL046*	N7
RL047	Q 6
RL048*	P7
RL050*	L6
RL051*	K7
RL052	M 6
RL053*	M6
RL054*	M6
RL055*	L7
RL056*	L7
RL057*	M 7
RL058*	L7
RL059*	Q6
RL063*	M 7
RL064*	P6
RL065*	P6
RL066*	Q7
RL067*	Q9
RL068*	Q 9
RL069*	Q9
RL070*	M 7
RL071*	L9
RL072*	K 9
RL073*	N6
RL080*	J6
RL081	K5
RL082	L6
RL084	P6
RL092*	L7
RL124*	N9
RL125*	N9
RL126*	M9
RL127*	M 9
RL129	P10
RL134*	N9
RL135*	N9
RL136*	M 9
RL137*	M9
RL146*	Q7
RL147*	Q7
RL149*	Q7

RL155*	L7
RL160*	L7
RL171*	L9
RL211*	L8
RL214*	K7
RP020	P0
RP022	N1
RP025	K2
RP025	K2
RP026*	K2
RP027*	K1
RP028	L1
RP029*	L1
RP030	L1
RP031	L1
RP032	M1
RP035	K2
RP040	L0
RP041*	M0
RP042*	M0
RP050	M2
RP051*	L1
RP052*	L0
RP053	L1
RP054	K1
RP054	K1
RP055	K3
RP056*	K0
RP059*	J1
RP060*	K1
RP061*	K1
RP062	J0
RP063*	K0
RP064*	J0
RP065*	K0
RP066	L1
RP067*	M0
RP068*	L1
RP069*	L0
RP070*	L2
RP100	R3
RP102*	M3
RP112	R4
RP112	R5
RP120*	M5
RP121*	L5
RP122*	M5
RP123*	K4
RP124*	K4
RP125*	L4
RP126*	K5
RP127*	K5
RP128	K5
RP129*	K5
RP130	L5
RP138*	J3
RP139*	K4
RP140*	H2
RP141*	H2
RP142*	H2
RP143*	J2
RP144*	H0
RP145*	H0
RP146*	H1
RP147*	H0
RP148*	H1
RP149*	J1
RP150*	P4
RP151*	P4
RP152*	N5
RP156	N4
RP157*	N4
RP158*	P4
RP159*	N4
RP160*	J4
RP161*	L4
RP162*	K3
RP163*	L3
RP164*	H1
RP165*	H1
RP166*	H0
RP167*	H0
RP168*	G0
RP170*	K6
RP171*	H4
RP172*	J4
RP173	K6
RP175*	H4
RP176*	H4
RP177*	H3
RP179*	J4
RP190*	A1
RP191*	A1
RP192*	A2
RP193*	A1
RP194*	B2
RR010*	D1
RR011*	C2
RR012*	C2
RR013*	F0
RR014*	G0
RR015	D1
RR016	D2
RR017	D1
RR018	F2

RR019	F 2
RR021	D4
RR025*	E0
RR026 *	E0
RR027*	E1
RR028*	D2
RR029*	F0
RR030 *	F0
RR031*	F0
RR032	E3
RR033	E3
RR034	E3
RR035	E3
RR036*	F0
RR037*	E0
RR038*	E0
RR039*	E0
RR040*	E0
RR041*	E1
RR042 *	F1
RR043 *	F0
RR044 *	C2
RR045 *	C2
RR048*	F2
RR049*	F2
RR050*	B2
RR051*	B1
RR052*	B2
RR053*	C2
RR055*	C2
RR056*	C2
RR057*	E3
RR060*	B2
RR061*	B1
RR062*	B3
RR063*	B2
RR065*	C2
RR066*	C2
RR067*	B2
RR070*	B2
RR071*	B3
RR072	B2
RR075*	B1
RR076*	B1
RR084*	G1
RR085	G2
RR086	C4
RR087	E2
RR088	C4
RR089	E2
RR091*	G0
RR093*	F1
RR097*	F3
RR098*	G1
RR099*	G1
RR100*	C2
RR103*	G4
RR104*	E1
RR105*	G1
RR106*	G0
RR107*	G1
RR171*	B2
RR910*	F4
RR924*	E2
RV001*	H8
RV002	H7
RV003*	J7
RV011*	H9
RV012*	H8
RV021*	G5
RV022*	J5
RV038*	G5
RV041*	G7
RV043*	G7
RV051*	G5
RV052*	G6
RV053*	H6
RV061*	H6
RV062*	H6
RV063*	H5
RV064	H5
RV066*	H5
RV071*	J6
RV072*	H6
RV073*	H5
RV074	H5
RV076*	H5
RV081*	J6
RV082 *	H6
RV083*	H5
RV084	H5
RV086*	H5
RV091*	H6
RV092*	H6
RV101*	L6
RV107*	J5
RV108*	K6
RV109*	K5
RV110*	L6
RV112*	K6
RV201*	H7
RV202*	F6
RV203*	F7
RV206*	H7
RV213*	J6

RV216*	J 6
RV221*	K7
RV222*	K6
RV223*	K7
RV231	K7
RV232	J7
RV233	J7
RV241*	J5
RV242*	J5
RX107*	H11
RX111*	H11
RX115*	H11
RX116*	H10
RX120*	H10
RX121*	H10
RX122	G10
RX130*	J11
RX131*	F8
RX132*	F8
RX133*	F8
RX134*	F8
RX140*	J11
RX150*	F10
RX151*	F10
RX215*	E11
RX220*	F11
RX221*	E11
RX250*	E10
RX251*	E10
RX280*	B8
RX281*	D10
RX282*	D10
RX301*	E11
RX303*	E11
RX350*	E10
RX351*	E10
RX900	F10
RX910	G10
RX911*	H10
RX912*	H10
RX920*	D9
RX921*	D10
RX922*	D10
RX950*	F9
RX951*	G8
RX955*	E9
RX956*	E9
RX960*	F9
RX961*	G8
RX965*	E9
RX966*	E9
RX991	H9
RX992	D9

TI010*	C5
TI020*	C6
TI030*	D8
TI031*	D8
TI032*	D8
TI033*	F6
TI034*	E8
TI040*	D5
TI045*	D5
TI050*	C6
TI070*	E4
TI090*	E7
TI091*	E7
TI092*	D8
TI093*	D8
TL001*	K5
TL004*	Q6
TL005*	R6
TL028	Q11
TL030	R8
TL030	R9
TL062*	K7
TL063*	M6
TP025*	K2
TP026*	K2
TP027 *	J0
TP060	N0
TP129*	L5
TP145*	H2
TP146	J2
TP150*	N5
TP152*	N4
TP161*	K3
TP162*	K3
TP166*	H0
TP167*	G0
TP170*	K6
TP175*	H4
TP190*	A1
TR002*	F0
TR048*	F2
TR091*	G0
TR095*	F2
TR102*	G4
TR105*	G1
TR106*	G2
TV002	H7

TV063*	H5
TV073*	H5
TV083*	H5
TV108	K6
TX910	H10
TX920	D10
TX950	F9
TX955*	E9
TX960*	F9
TX965*	E9

H5
H5
H5
K6
H10
D10
F9
E9
F9
E9

MAINS FILTER - MIS 19000

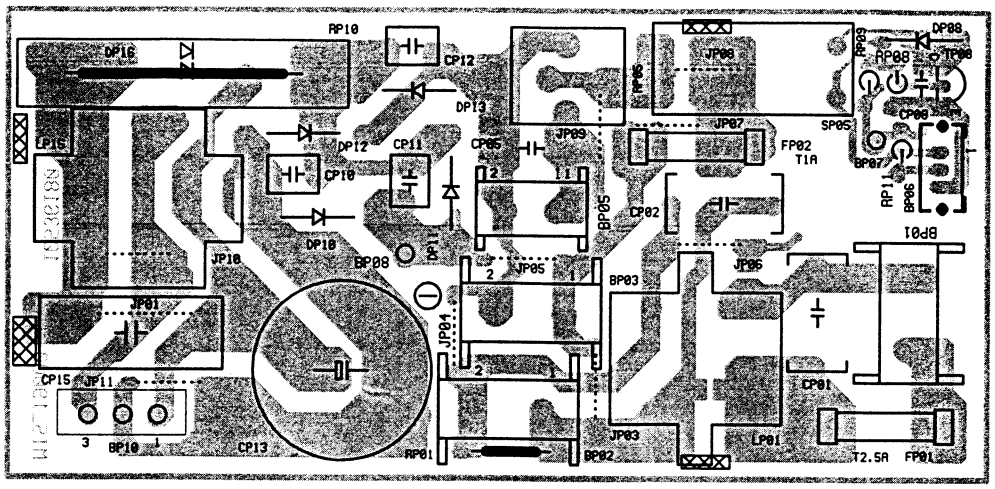

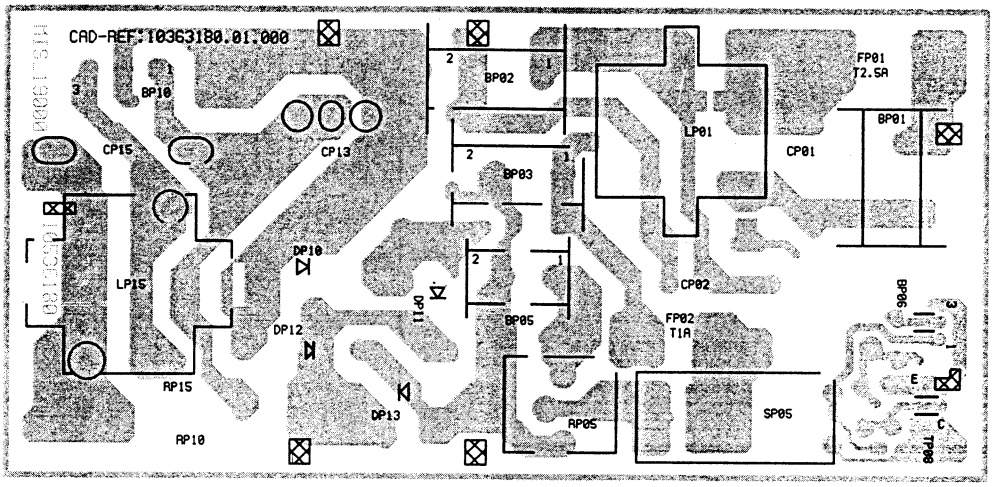

INTEGRATED CIRCUITS AND TRANSISTORS OUTLINE - CIRCUITS INTEGRES ET TRANSISTORS INTEGRIERTE SCHALTUNGEN UND TRANSISTOREN - CIRCUITI INTEGRATI TRANSISTOR CIRCUITOS INTEGRADOS Y TRANSISTORES

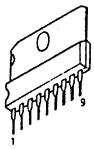
TDA 8139

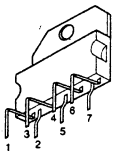
TDA 8177

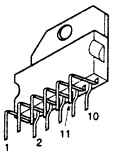
TDA7269

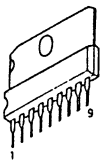
TEA 5101B

4N25TV

TDA4605
ST24C04-B1

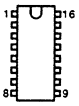
STV2145

TEA6415C

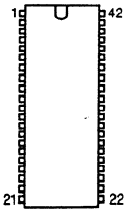
TDA9811

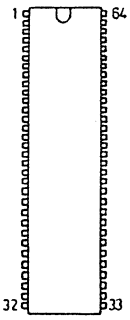
MPS3400
MPS3410

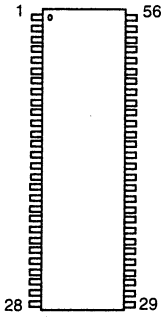
STV2162

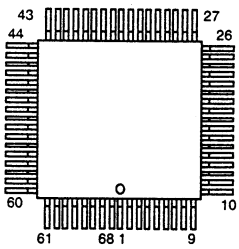
ST90R92

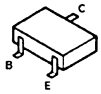
BCR141- BC846B
BC 847B-BC856B
BC857B-BF 799
BC 848 A/B/C

BC368
BF 422
BF423

BC 337
BC 548B
BC 558B

2SA1837
2SC4793
BD 241

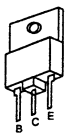
BUL810TH
BUV48CFITH16
ON4977

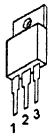
7805
7812

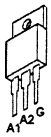
BT806 -600C

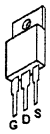
STP6 NA60F1

COMPLETE PCB DIAGRAM - SCHEMA PLATINE PRINCIPALE EQUIPEE - SCHALTUNG LEITERPLA

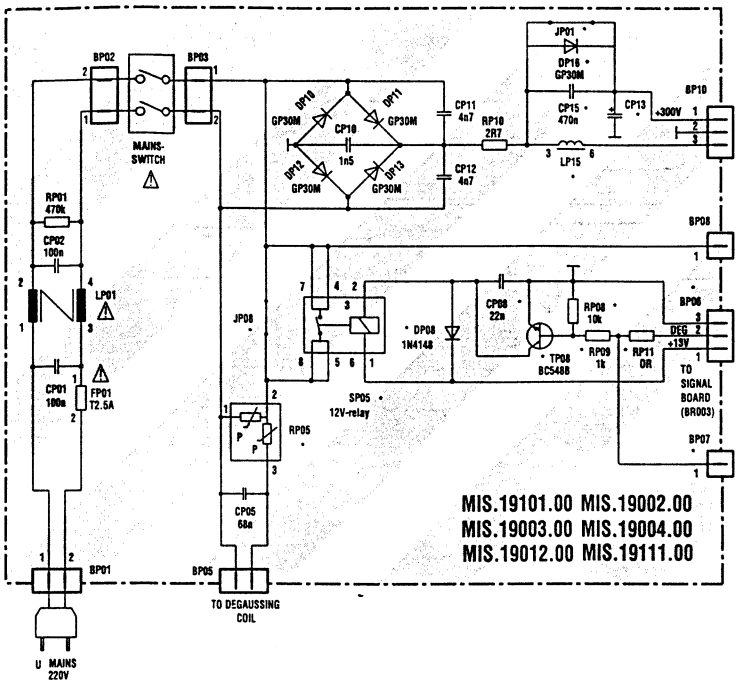

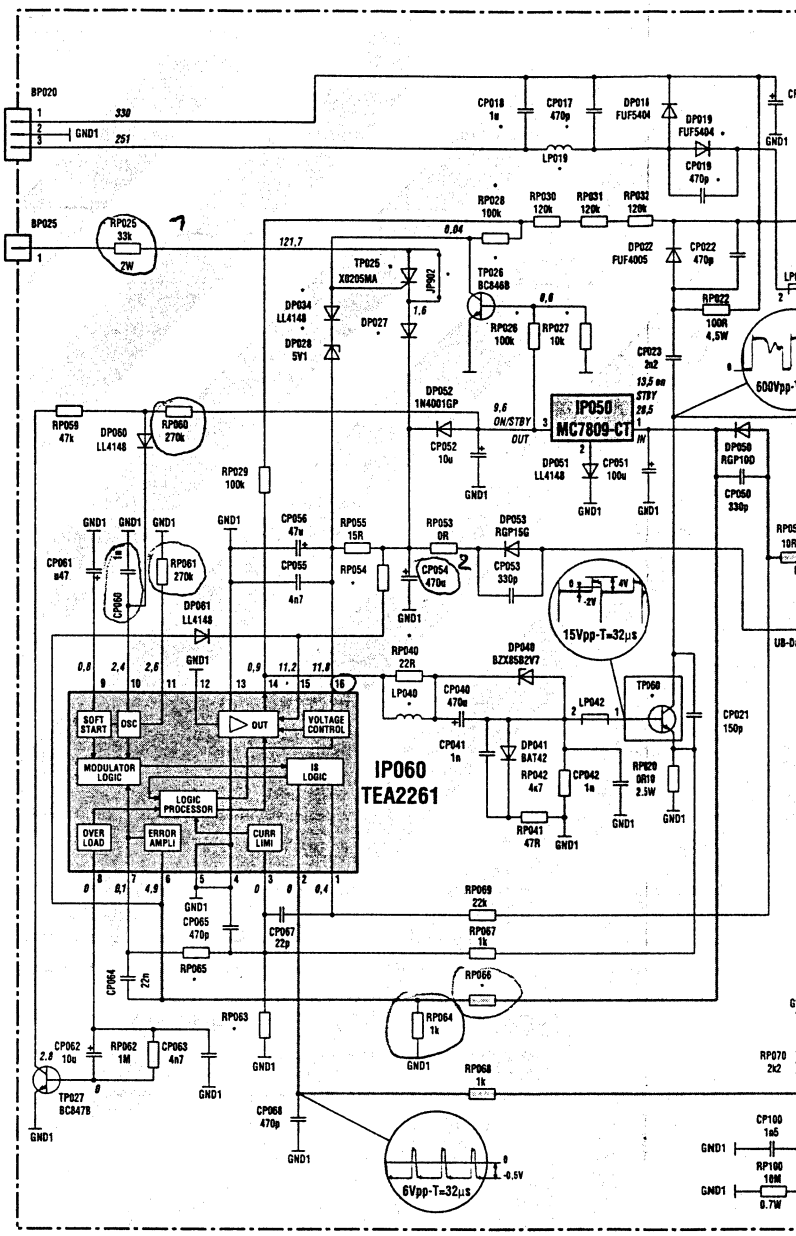

DESIGNATON POWER
PP.19100.00, PP.19101.00, PP.19110.00, PP.19111.00

*	PP 19111 00 10536990	PP 19101 00 10393830	PP 19110 00 10536980	PP 19100 00 10353750
	100Hz/Dolby	100Hz/Dolby	100Hz/Stereo	100Hz/Stereo
CP017/018/019	-	X	-	X
CP020	150u	150u	150u	150u
CP112	3n3	3n3	3n3	3n3
CP126	X	X	-	-
CP146	X	X	X	X
DP019	-	X	-	X
DP027	1N4148	1N4148	1N4148	1N4148
DP028/034	X	X	X	X
DP108/109	BYW029-150	BYW029-150	RGP30D	RGP30D
DP110	MUR1100E	RGP50M	RGP50M	RGP50M
DP113	RGP10M	MUR1100E	MUR110E	MUR1100E
DP126	X	X	-	-
DP140	BYV63-50	BYV63-150	MR822	MR822
JP902	-	-	-	-
JP910/911	-	-	-	-
JP913	-	-	X	X
JP914	139V	139V	139V	139V
JP915	136V	136V	136V	136V
JP916	130V	130V	127V	130V
JP917	142V	142V	142V	142V
LP019	-	105u	-	105u
LP020	10397920	10397920	10397920	10459670
LP021	-	X	-	X
LP040	2u2	2u2	2u2	2u2
RP026/028	X	X	X	X
RP027	X	X	X	X
RP040	1/2W	1/2W	1/2W	1/2W
RP054	6R8	6R8	6R8	6R8
RP063	-	47k	-	47k
RP065	11k	12k1	11k	12k1
RP066	4k22	3k57	4k22	3k57
RP126/128	X	X	-	-
RP127/129	X	X	-	-
RP130	X	X	-	-
RP138/139	X	X	X	X
RP146	X	X	X	X
RP157	130k	130k	130k	130k
RP177	12k	12k	12k	12k
TP025/026	X	X	X	X
TP060	BUL810TH	BUL810TH	BUL810TH	BUL810TH
TP129	X	X	-	X
TP146	X	X	X	X
TP162	-		X	X

X Inserted
– Not inserted

*	different comp.	BP06	BP07	CP08	CP13	CP15	DP08	DP16	JP01	JP08	LP15	RP05	RP08	RP09	SP05	TP08
MIS.19101	100Hz/+relay	X	X	X	150u	X	X	X	–	–	1.5mH	18R	X	X	X	X
MIS.19002	50Hz	–	–	–	100u	X	–	X	–	X	3mH	25R	–	–	–	–
MIS.19003	50Hz/+relay	X	X	X	100u	X	X	X	–	–	3mH	18R	X	X	X	X
MIS.19004	50Hz/45W Pict.Pow.	–	–	–	–	X	–	X	–	X	3mH	25R	–	–	–	–
MIS.19012	50Hz	–	–	–	100u	–	–	–	X	X	–	25R	–	–	–	–
MIS.19111	100Hz/+relay	X	X	X	150u	–	X	–	X	–	–	18R	X	X	X	X

X Inserted
– Not inserted

Part of board connected to mains supply.
Partie du chassis reliée au secteur.
Primärseite des Netzteils.
Parte dello châssis collegata alla rete.
Parte del chassis conectada a la red.

⚠ Use isolating mains transformer
Utilise un transformateur isolateur du secteur
Einen Trenntrafo verwenden
Utilizar un transformador aislador de red
Utilizzare un transformatore per isolarvi dalla rete

UNG LEITERPLATTE KPL - SCHEMA PIASTRA COMPLETA - ESQUEMA PLATINA EQUIPADA

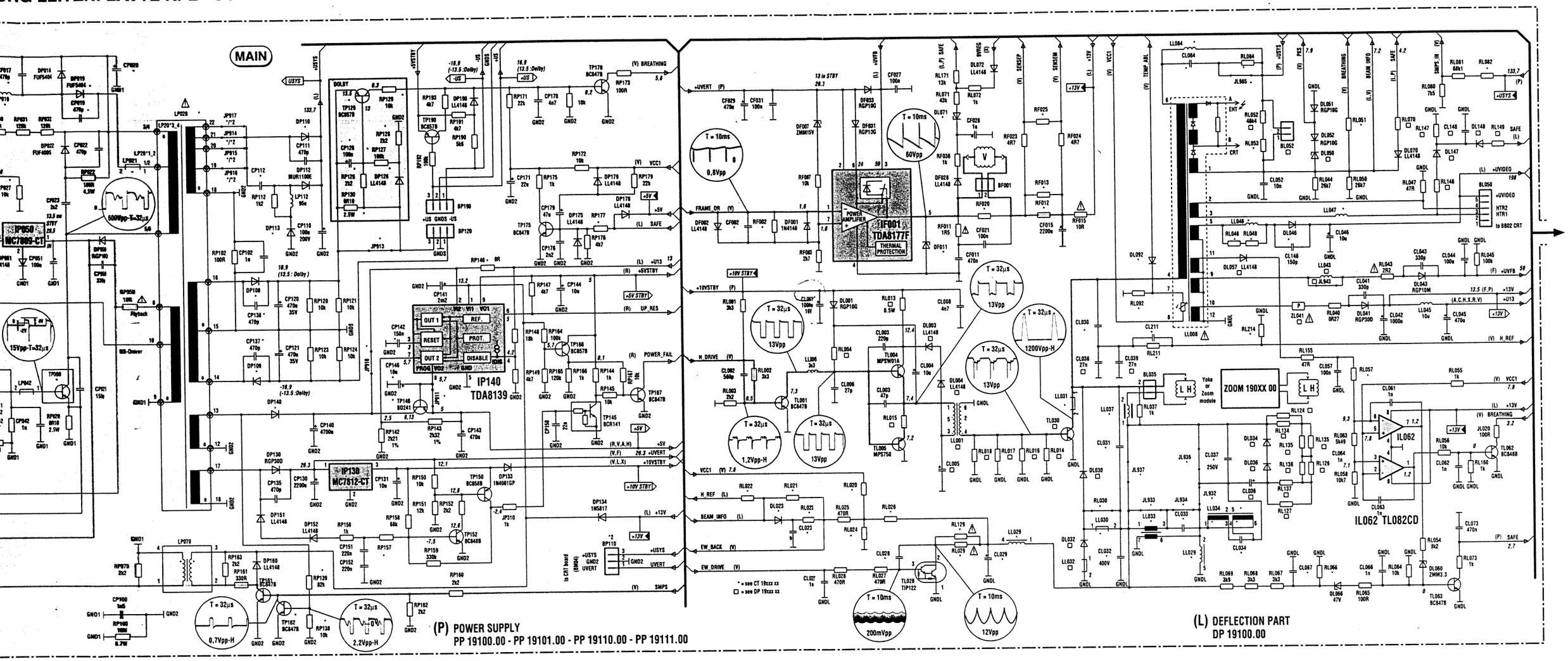

	LP15	RP05	RP08	RP09	SP05	TP08
	1.5mH	18R	X	X	X	X
	3mH	25R	—	—	—	—
	3mH	18R	X	X	X	X
	3mH	25R	—	—	—	—
	—	25R	—	—	—	—
	—	18R	X	X	X	X

ly.

secteur

ed
vi dalla rete

Note :
Power Supply primary circuit measurements.
- Use only (GND1) connection point.

Attention :
Mesure dans le bloc alimentation
- Utiliser la masse du bloc alimentation (GND1).

Achtung :
Bei Messungen im Primärnetzteil
- Primärnetzteilmasse verwenden (GND1).

Attentionze :
misure nell'alimentatore primario
- usare massa alimentazione primario (GND1).

Cuidado :
Medida en el bloque de alimentacion
- Utilizar la masa del bloque de alimentacion (GND1).

⚠ Safety Part
When repairing, use original part only
Piece de securite
N'utilisez que les pieces d'origine
Sicherheitsbauteil
Bei Ersatz nur Originalteil verwenden
Componenti di sicurezza
durante la ripazione usare componenti originali
Pieza de seguridad
Utilice solo piezas originales

	Deflection - Basic Partlists
□	100Hz
	DP 19100 00
	10 34 99 80
BL052	—
CL005	470u/16V
CL036	2u2/250V
CL038	—
CL039	54n
CL148	220n
DL003/04	—
DL030	DTV32F-1500
DL032	BYT08-400
DL034/036	BYT01-200
DL050	BZX85C22
DL057	—
DL147/148	LL4148
JL943	—
LL001	10 46 87 60
LL030	—
LL032	10 25 84 40
LL043	22u
RF015	PTC-15R
RL004	1k
RL013	4R7
RL014	40R2
RL015	1R
RL016/17	40R2
RL018	40R2
RL070	15k
RL071	43k
RL124/127	7k5
RL134/137	7k5
RL146	100R
RL147	4k7
RL149	1k
TL030	ON4977
ZL041	MP160

	Deflection - Picture Tube related Partlists					
*	CT 19101 34	CT 19105 37	CT 19152 37	CT 19111 34	CT 19112 34	CT 19151 34
	10 36 28 80	10 35 15 30	10 52 06 10	10 44 48 10	10 47 54 60	10 52 06 00
	100Hz 25-28"MP 4/3	100Hz 29"SF 4/3	100Hz-MCU 29"SF 4/3	100Hz 28"SF 16/9	100Hz 32"SF 16/9	100Hz-MCU 32"SF 16/9
CF002	680p	680p	680p	2n2	2n2	2n2
CL023	—	—	—	—	—	—
CL028	56n	1n	1n	56n	56n	56n
CL029	470n/63V	3u3/63V	3u3/63V	470n/63V	470n/63V	470n/63V
CL030	1n9/2KV	1n9/2KV	1n9/2KV	2n7/2KV	2n7/2KV	2n7/2KV
CL031	11n6/2KV	11n6/2KV	11n6/2KV	11n6/2KV	11n6/2KV	11n6/2KV
CL032	33n/400 V	24n/400V	24n/400V	33n/400V	33n/400V	33n/400V
CL033	560n/250V	—	—	680n/250V	680n/250V	680n/250V
CL034	12n/400V	12n/400V	12n/400V	12n/400V	12n/400V	12n/400V
CL037	680n/250V	410n/400V	410n/400V	560n/250V	560n/250V	560n/250V
CL067	100n/100V	—	—	100n/100V	100n/100V	100n/100V
CL084	3n9/400V	3n9/400V	3n9/400V	3n9/400V	3n9/400V	3n9/400V
CL211	470p	470p	470p	470p	470p	470p
DF011	10 36 82 10	10 36 82 10	10 36 82 10	10 36 82 10	10 36 82 10	10 36 82 10
DL023	—	—	—	—	—	—
DL046	MUR160	MUR160	MUR1100E	MUR160	MUR160	MUR1100E
DL071	BZX55C33	BZX55C33	BZX55C33	BZX55C24	BZX55C24	BZX55C24
DL092	1N4148	1N4148	1N4148	1N4148	1N4148	1N4148
JL932	—	—	—	—	—	—
JL933	—	X	X	—	—	—
JL934	—	X	X	—	—	—
JL936	—	—	—	—	—	—
JL937	—	—	—	—	—	—
JL985	X	X	X	X	X	X
LL008	10 46 03 60	10 46 80 70	10 51 08 70	10 46 81 60	10 46 81 60	10 52 03 30
LL029	10 34 76 50	10 15 42 70	10 15 42 70	10 34 76 50	10 34 76 50	10 34 76 50
LL030	—	LFBEAD 90R	LFBEAD 90R	—	—	—
LL031	LFBEAD 90R	JUMPER	JUMPER	LFBEAD 90R	LFBEAD 90R	LFBEAD 90R
LL033	10 34 76 60	—	—	10 34 76 60	10 34 76 60	10 34 76 60
LL034	10 15 32 70	10 15 32 70	10 15 32 70	10 15 32 70	10 15 32 70	10 15 32 70
LL037	4u2	3u	3u7	4u	4u	4u2
LL046	47u	47u	22u	47u	47u	22u
LL047	13u5	13u5	13u5	13u5	13u5	13u5
LL084	29u5	29u5	29u5	29u5	29u5	29u5

	Deflection - Picture Tube related Partlists					
*	CT 19101 34	CT 19105 37	CT 19152 37	CT 19111 34	CT 19112 34	CT 19151 34
	10 36 28 80	10 35 15 30	10 52 06 10	10 44 48 10	10 47 54 60	10 52 06 00
	100Hz 25-28"MP 4/3	100Hz 29"SF 4/3	100Hz-MCU 29"SF 4/3	100Hz 28"SF 16/9	100Hz 32"SF 16/9	100Hz-MCU 32"SF 16/9
RF002	10k	10k	10k	10k	10k	10k
RF012	1R	1R	1R	1R5	1R5	1R5
RF013	1R	1R	1R	1R82	1R82	1R82
RF020	180R	270R	270R	—	—	—
RF025	39R	43R	43R	150R	150R	150R
RL020	4k64	7k15	7k15	4k64	4k64	4k64
RL021	—	—	—	—	—	—
RL023	—	—	—	—	—	—
RL024	2k67	4k02	4k02	2k67	2k67	2k67
RL026	36k5	61k9	61k9	36k5	36k5	36k5
RL029	—	2R2	2R2	—	—	—
RL046/48	3k3	3k3	3k3	3k3	3k3	3k3
RL051	270k	270k	270k	270k	270k	270k
RL053	6k34	8k66	8k66	6k34	6k34	6k34
RL057	26k1	27k4	56k2	47k5	47k5	56k2
RL066	—	2k2	2k2	—	—	—
RL082	59k	61k9	61k9	59k	59k	59k
RL084	—	—	—	—	—	—
RL092	4k7	4k7	4k7	4k7	4k7	4k7
RL129	2R2	—	—	2R2	2R2	2R2
RL211	6k8	6k8	6k8	6k8	6k8	6k8
RL214	—	—	—	—	—	—
ZOOM MODULE	—	—	—	—	—	—

Note : the last two numbers of the CT xxxx part list name indicates the system voltage.
e.g. CT 19005 31 Usys 131V →

Nota: Los dos últimos números de la denominación CT xxxx, indica la tensión Usys
e.g. CT 19005 31 Usys 131V →

X Inserted
— Not inserted

COMPLETE PCB DIAGRAM - SCHEMA PLATINE PRINCIPALE EQUIPEE - SCHALTUNG LEITERPLATTE KPL - SCHEMA PIASTRA COMPLETA - ESQUEMA PLATINA EQUIPADA

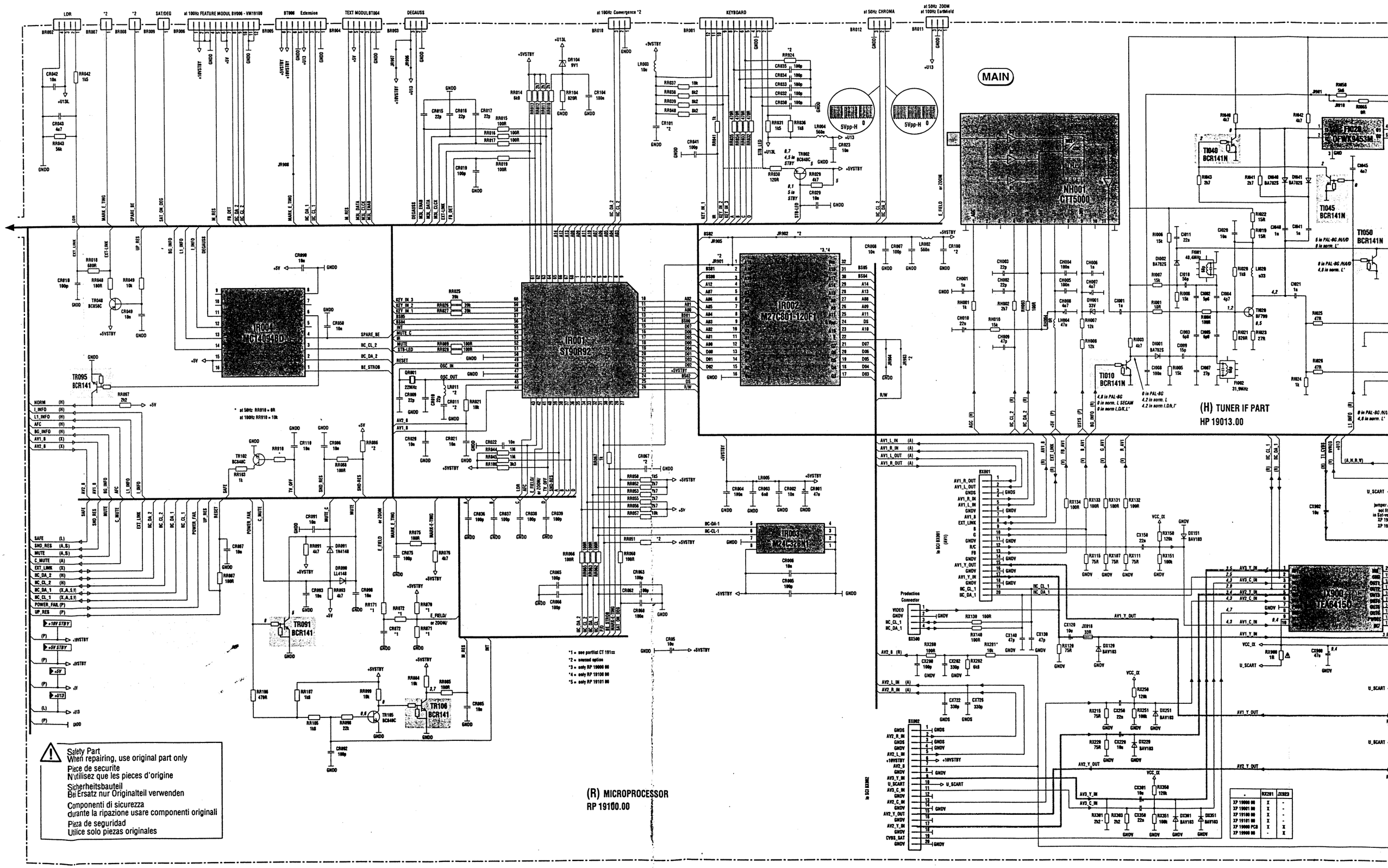

	RX281	JX923
XP 19000 00	X	-
XP 19001 00	X	-
XP 19100 00	X	-
XP 19101 00	X	-
XP 19000 PCB	X	X
XP 19900 00	-	X

UIPADA

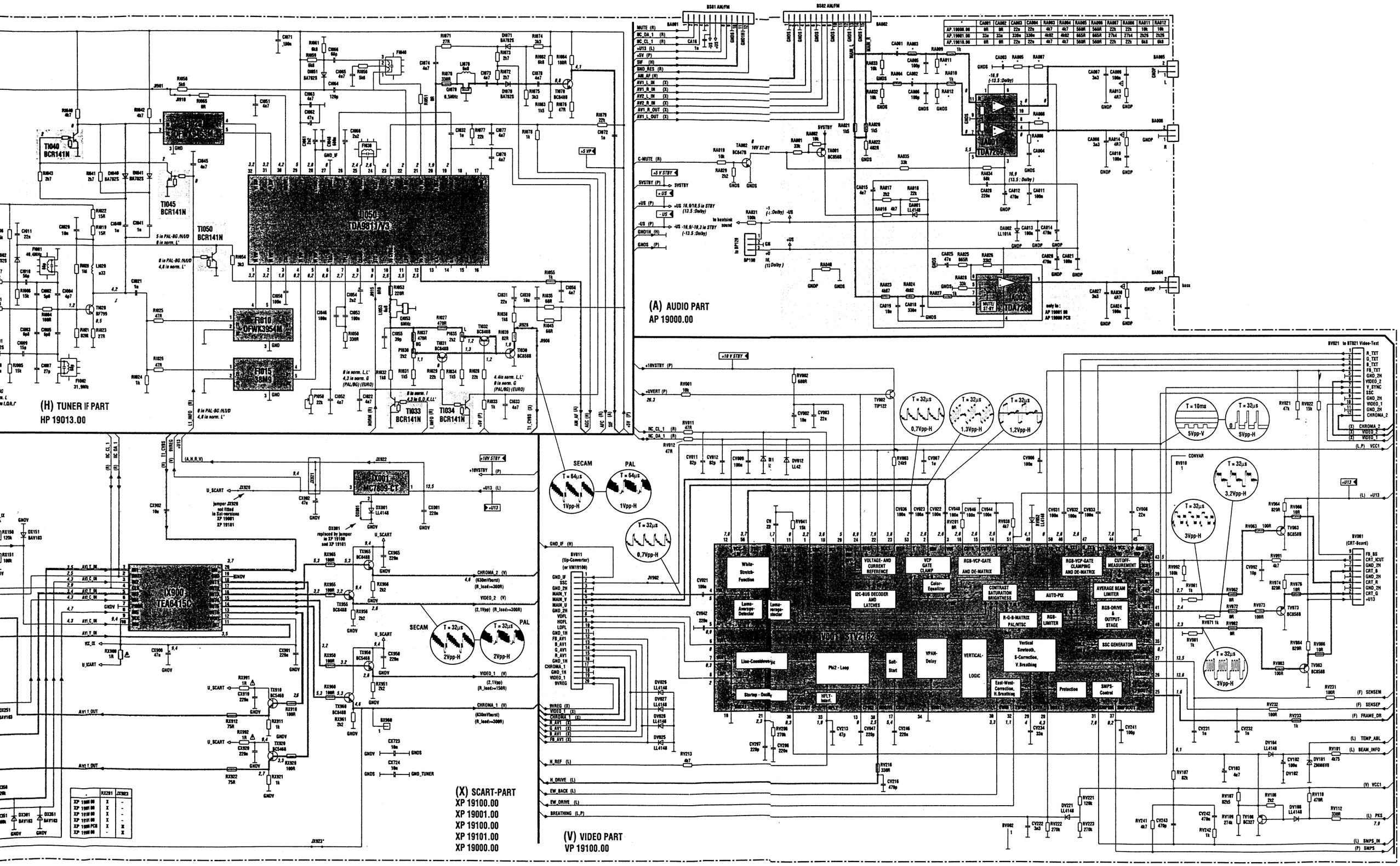
(H) TUNER IF PART
HP 19013.00
(A) AUDIO PART
AP 19000.00
(X) SCART-PART
XP 19100.00
XP 19001.00
XP 19100.00
XP 19101.00
XP 19000.00
(V) VIDEO PART
VP 19100.00
IX900
TEA6415C
IX001
MC7809-CT
IV001
STV2162
IA001
TDA7269
IA002
TDA7298
TI050
TDA9817/V3
FI010
OFWK3954M
FI015
38M9
TI040
BCR141N
TI045
BCR141N
TI050
BCR141N
TI033
BCR141N
TI034
BCR141N
SECAM
PAL
T = 64µs
1Vpp-H
T = 32µs
0,7Vpp-H
T = 32µs
1,3Vpp-H
T = 32µs
1,2Vpp-H
T = 10ms
5Vpp-V
T = 32µs
5Vpp-H
T = 32µs
3,2Vpp-H
T = 32µs
3Vpp-H
T = 32µs
2Vpp-H
T = 32µs
2Vpp-H
BV011
(Up-Converter)
(or VM19100)
BV021 to BT021 Video-Text
BV001
(CRT-Board)
White-Stretch-Function
Luma-Average-Detector
Luma-Average-Detector
VOLTAGE- AND CURRENT REFERENCE
VCP GATE CLAMP
RGB-VCP-GATE AND DE-MATRIX
RGB-VCP-GATE CLAMPING AND DE-MATRIX
CUTOFF-MEASUREMENT
I2C-BUS DECODER AND LATCHES
Color-Equalizer
CONTRAST SATURATION BRIGHTNESS
AUTO-PIX
AVERAGE BEAM LIMITER
R-G-B-MATRIX PAL/NTSC
RGB-LIMITER
RGB-DRIVE & OUTPUT-STAGE
SSC GENERATOR
Line-Countdown
Phi2 - Loop
Soft-Start
VPAN-Delay
VERTICAL-LOGIC
Vertical Sawtooth, S-Correction, V.Breathing
East-West-Correction, H.Breathing
Protection
SMPS-Control
Startup - Oscillator
HFLY-Interf.
CONVAR
(F) SENSEM
(F) SENSEP
(F) FRAME_DR
(L) TEMP_ABL
(L) BEAM_INFO
(V) VCC1
(L) PKS
(L) SMPS_IN
(P) SMPS

VM.19100.00

VM

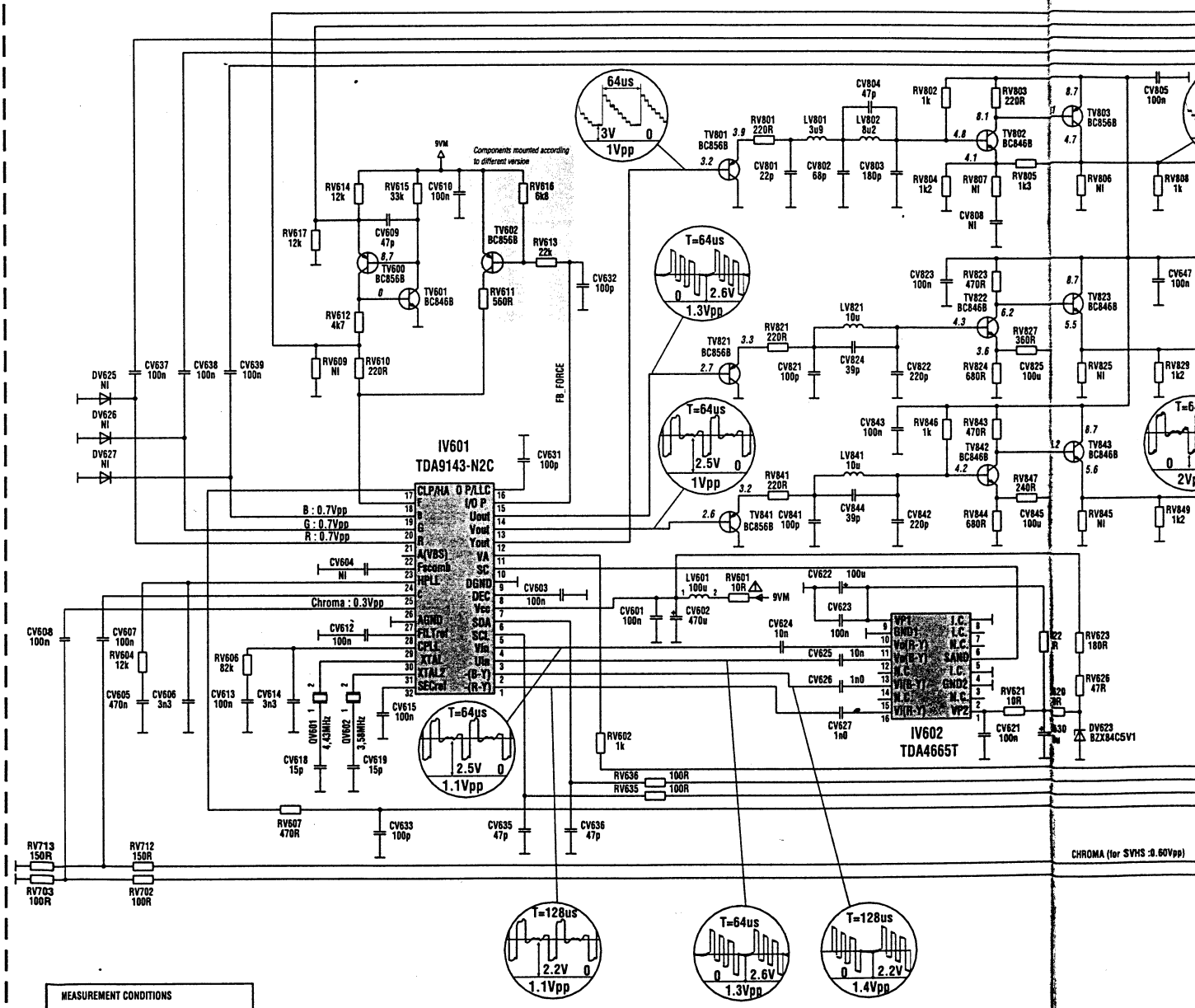

MEASUREMENT CONDITIONS

RECEIVER : On UHF level : 1mV test bar pattern
- SECAM Norm L standard, 100% white
DC voltages measured betwen the point and earth using a digital meter

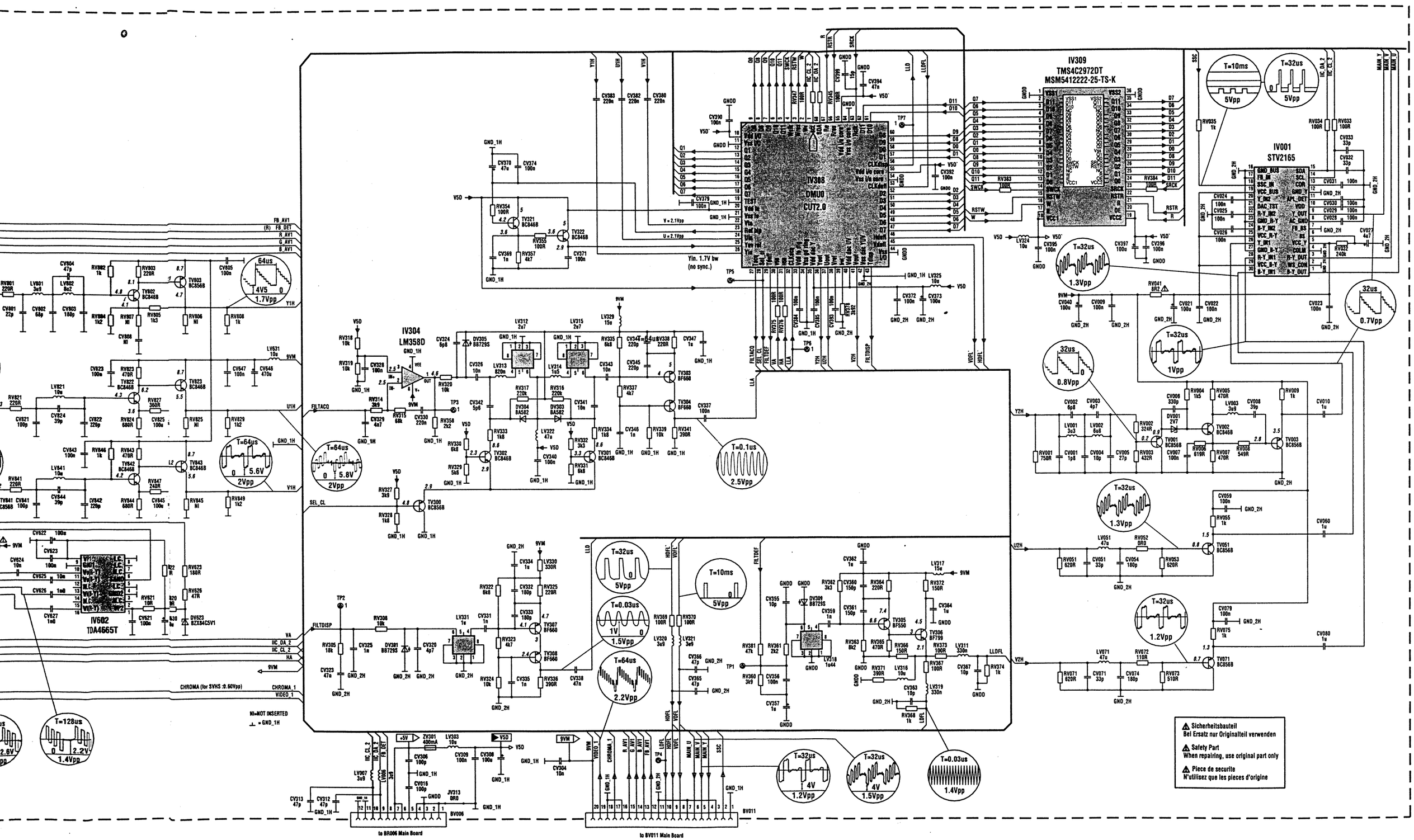
IV309
TMS4C2972DT
MSM5412222-25-TS-K
IV001
STV2165
IV308
DMU0
CUT2.0
IV304
LM358D
IV602
TDA4665T
Yin. 1.7V bw
(no sync.)
CHROMA (for SVHS :0.60Vpp)
NI=NOT INSERTED
to BR006 Main Board
to BV011 Main Board
Sicherheitsbauteil
Bei Ersatz nur Originalteil verwenden
Safety Part
When repairing, use original part only
Piece de securite
N'utilisez que les pieces d'origine

VM19100

COMPONENT SIDE - COTE COMPOSANTS - BESTÜCKUNGSSEITE
LATO COMPONENTI - LADO COMPONENTES

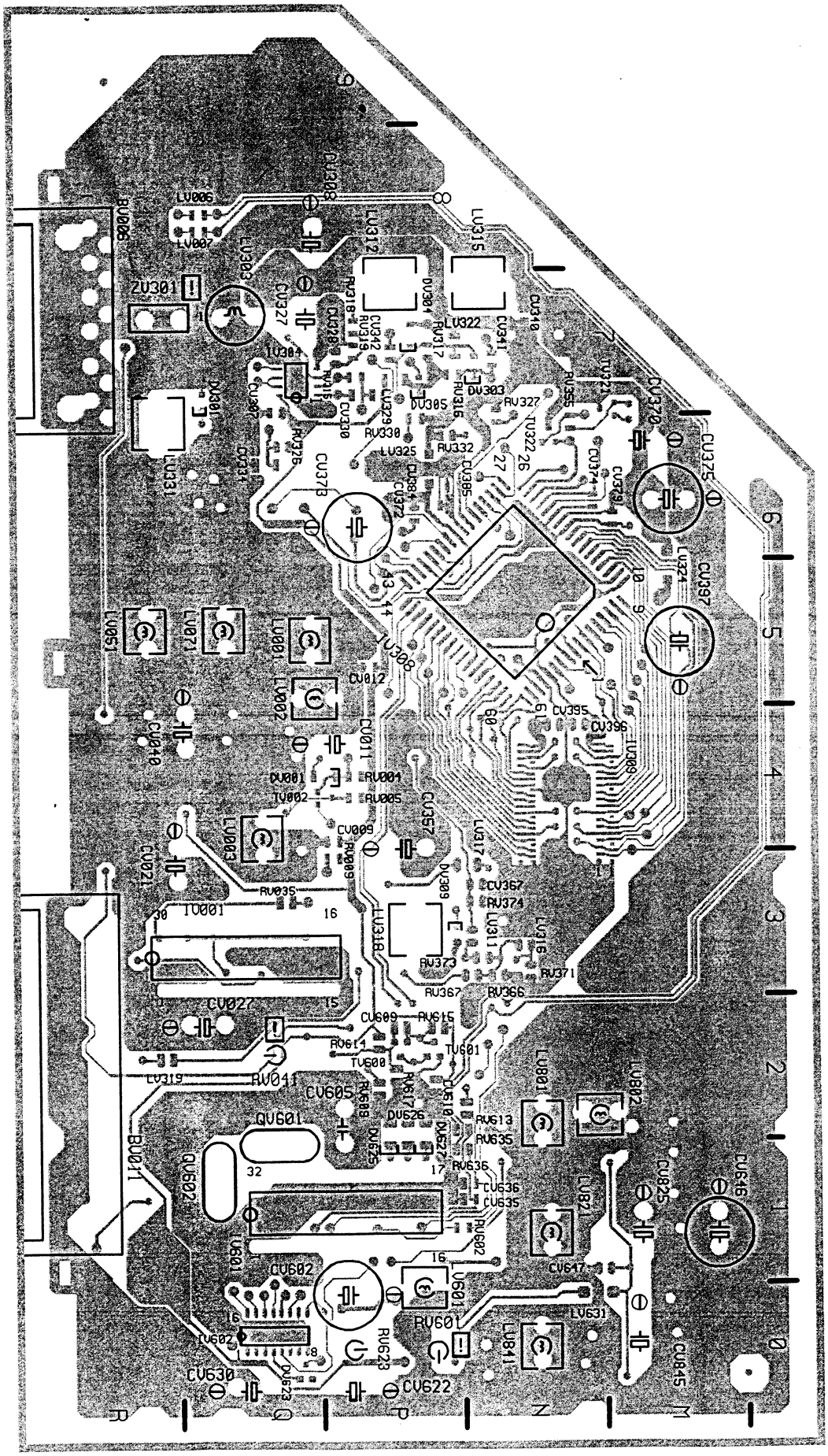

VM19100

SOLDER SIDE - CÔTE SOUDURES - LÖTSEITE - LATO SALDATURE - LADO SOLDADURAS

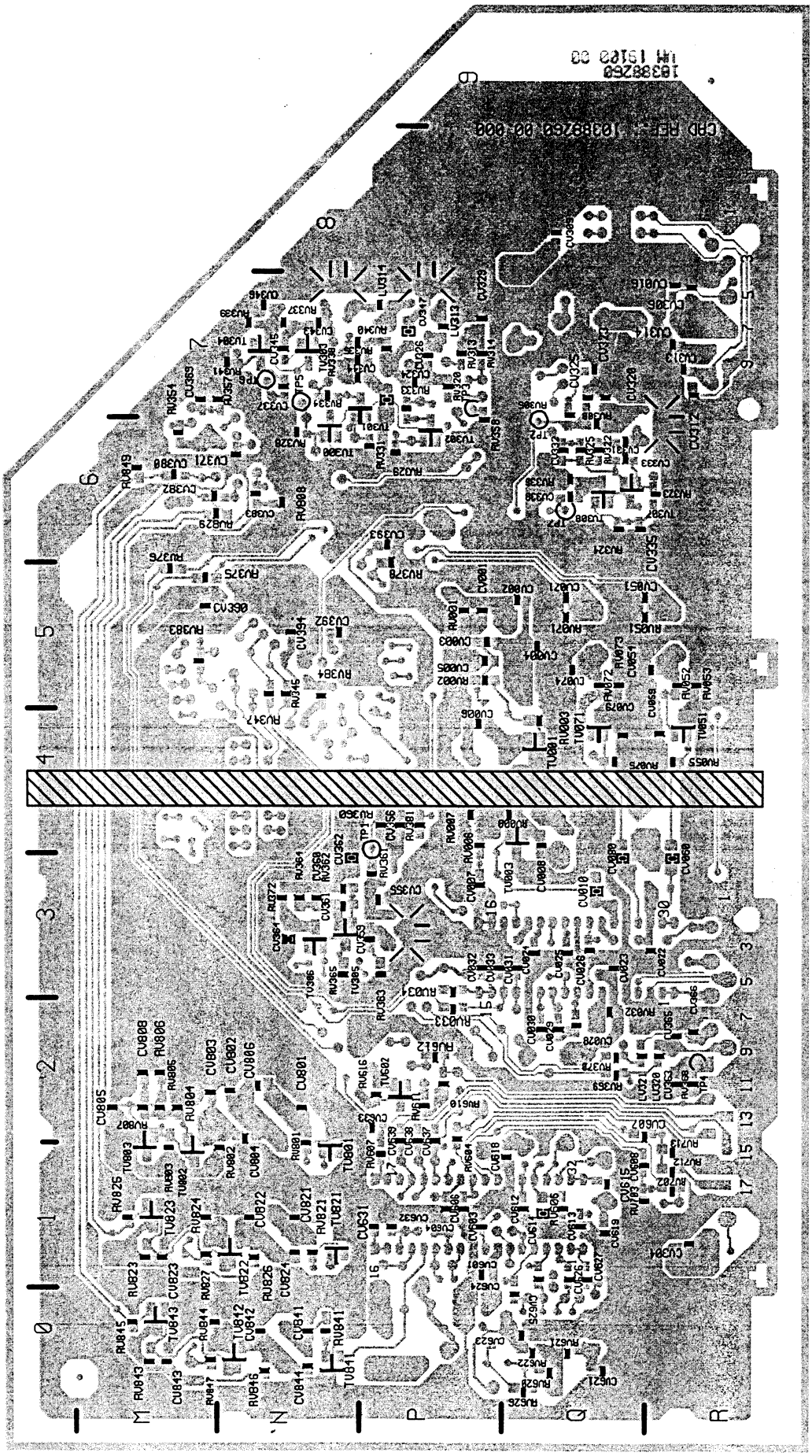

VIDEO AMPLIFIER BOARD - PLATINE AMPLIFICATEURS VIDEO - VIDEOVERSTÄRKERPLATTE - PIASTRA AMPLIFICATORE VIDEO - PLATINA AMPLIFICADOR VIDEO

CRT BS19100

COMPONENT SIDE - CÔTE COMPOSANTS - BESTÜCKUNGSSEITE - LATO COMPONENTI - LADO COMPONENTES

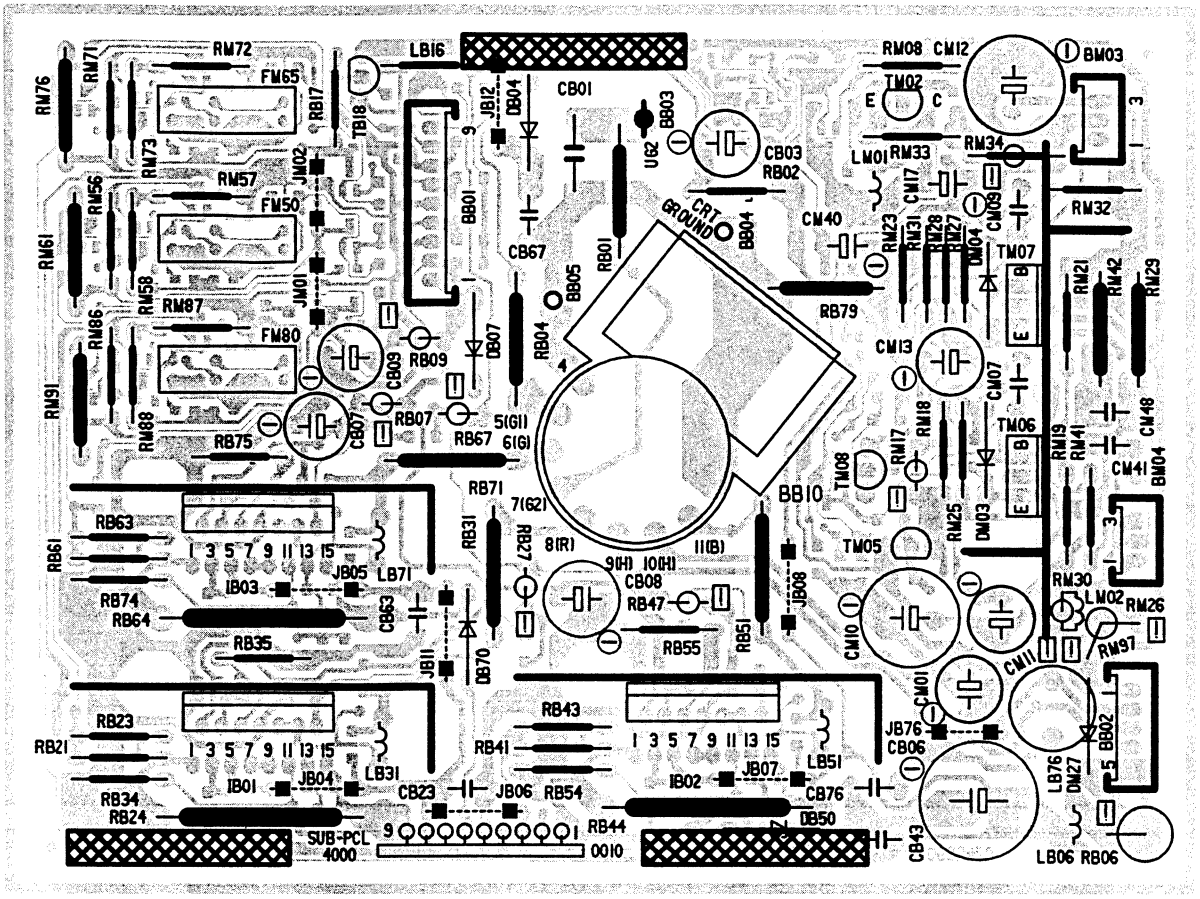

SOLDER SIDE - CÔTE SOUDURES - LÖTSEITE - LATO SALDATURE - LADO SOLDADURAS

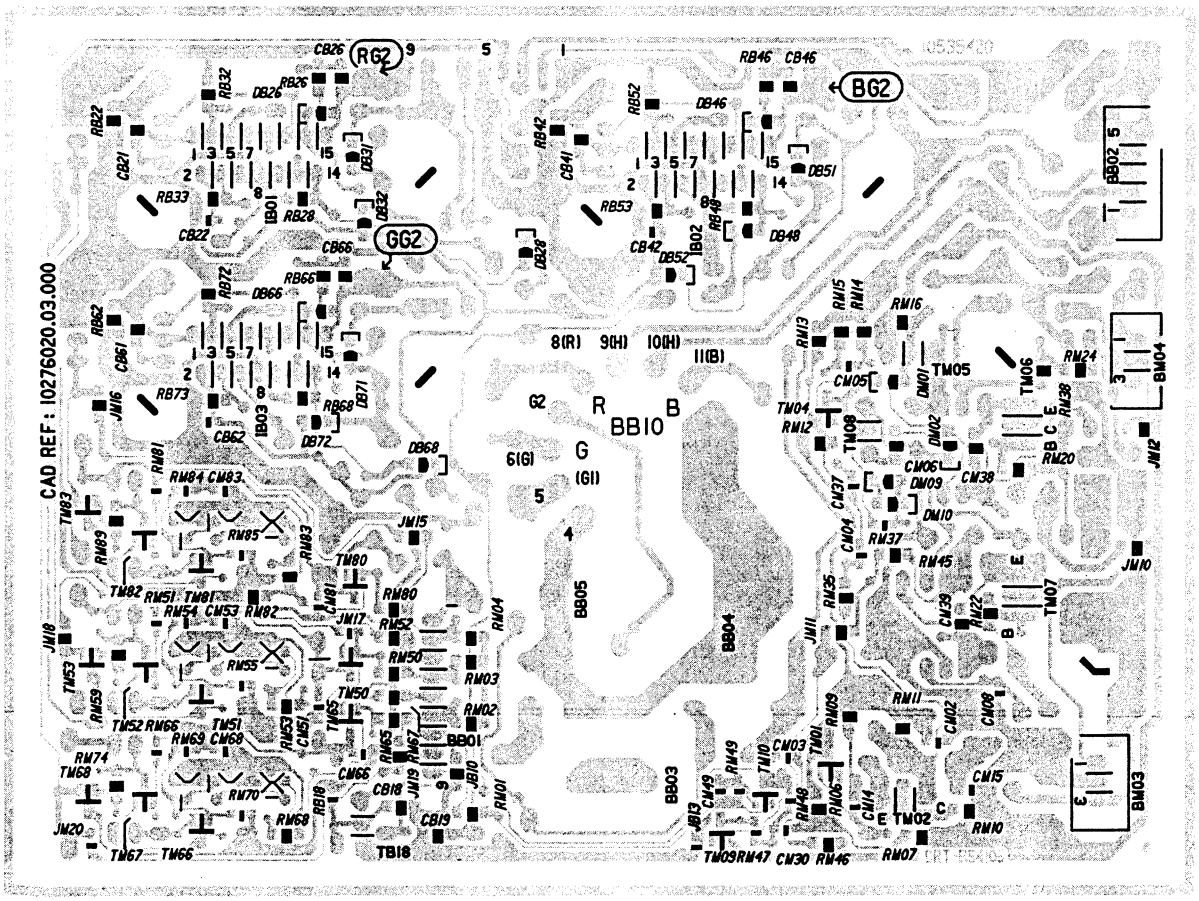

ICC19 100 Hz
First issue 09 / 97

VIDEO AMPLIFIER BOARD - PLATINE AMPLIFICATEURS VIDEO - VIDEOVERSTÄRKERPLATTE - PIASTRA AMPLIFICATORE VIDEO - PLATINA AMPLIFICADOR VIDEO

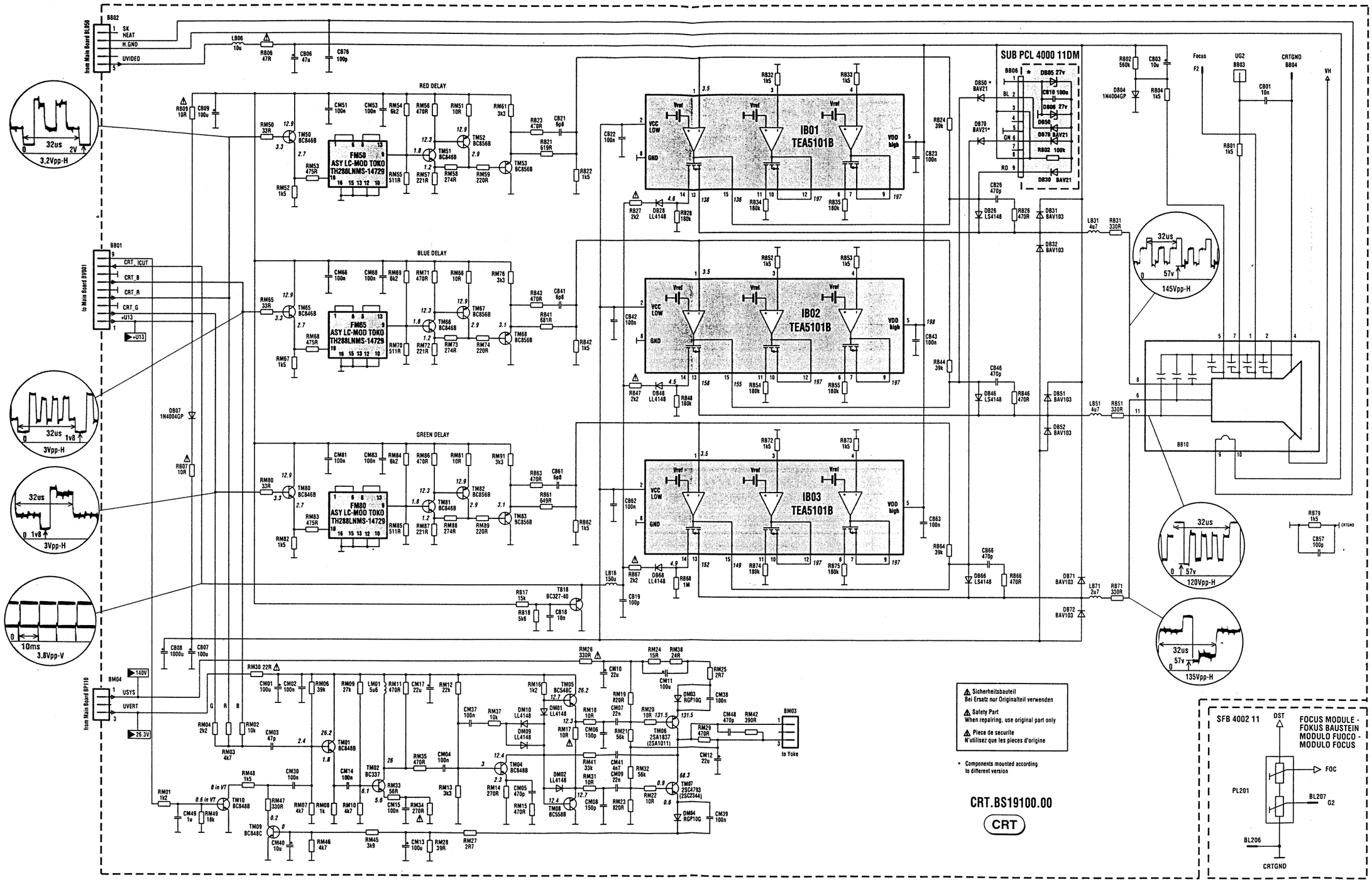

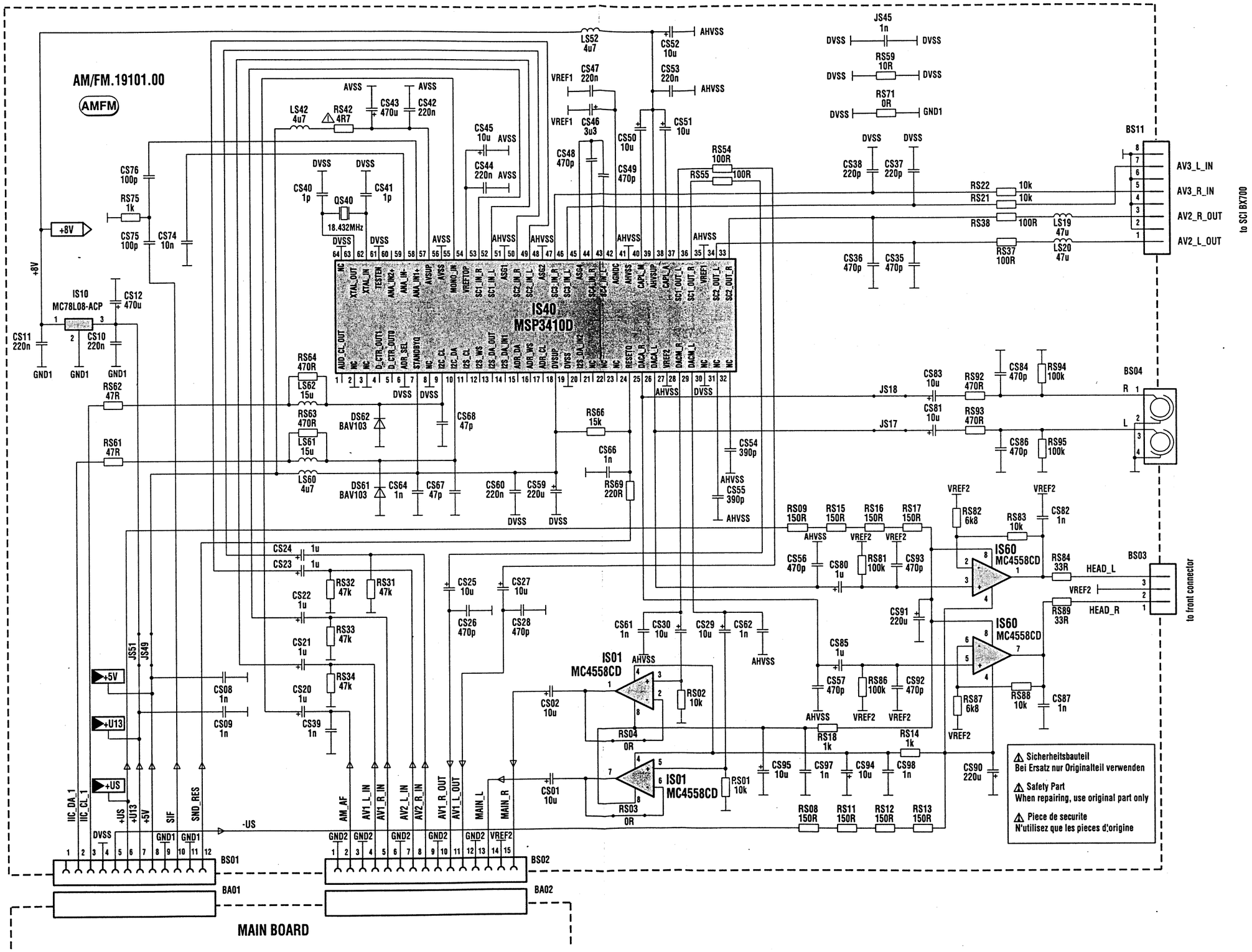
AM/FM.19101.00
AMFM
IS40
MSP3410D
IS10
MC78L08-ACP
IS60
MC4558CD
IS01
MC4558CD
BS11
AV3_L_IN
AV3_R_IN
AV2_R_OUT
AV2_L_OUT
to SCI BX700
BS04
BS03
HEAD_L
HEAD_R
to front connector
BS01
BS02
BA01
BA02
MAIN BOARD
Sicherheitsbauteil
Bei Ersatz nur Originalteil verwenden
Safety Part
When repairing, use original part only
Piece de securite
N'utilisez que les pieces d'origine

AM FM 19101

COMPONENT SIDE - COTE COMPOSANTS - BESTÜCKUNGSSEITE
LATO COMPONENTI - LADO COMPONENTES

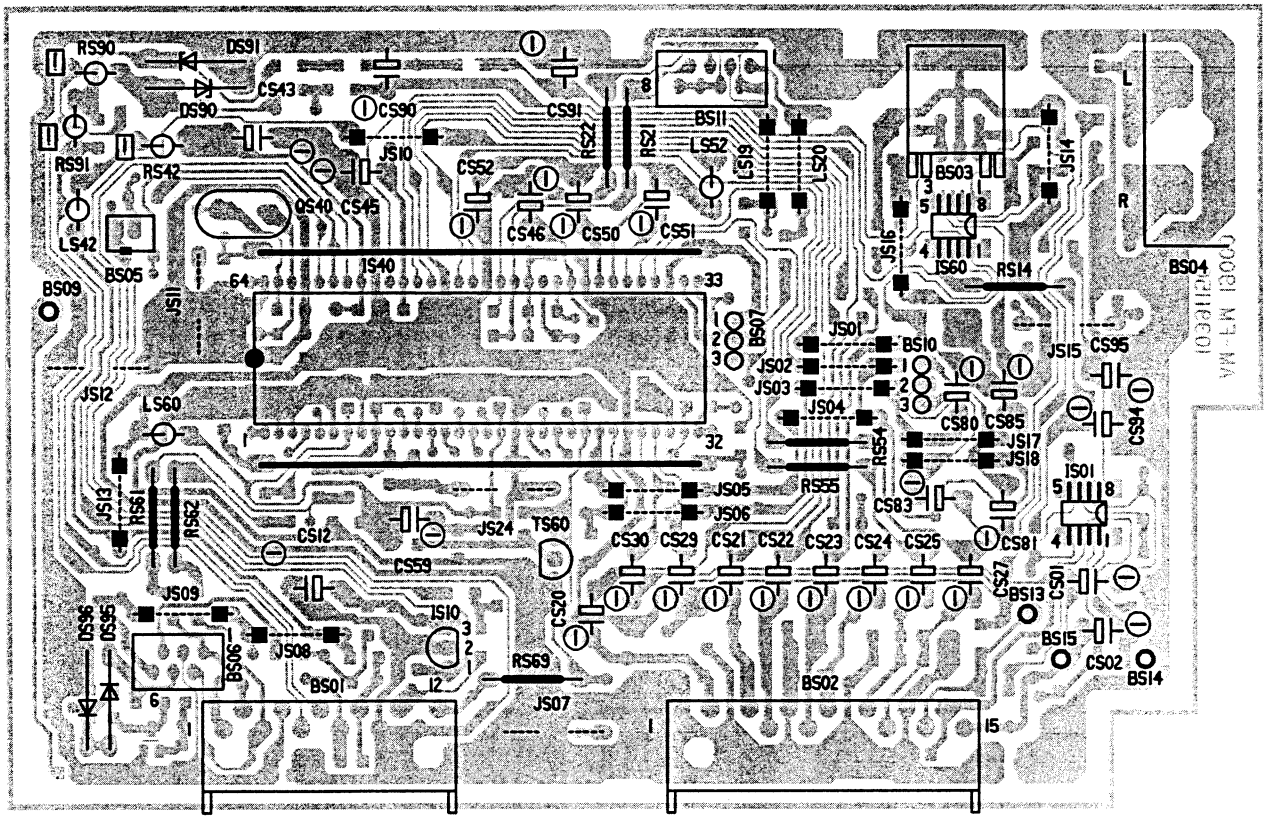

SOLDER SIDE - CÔTE SOUDURES - LÖTSEITE - LATO SALDATURE - LADO SOLDADURAS

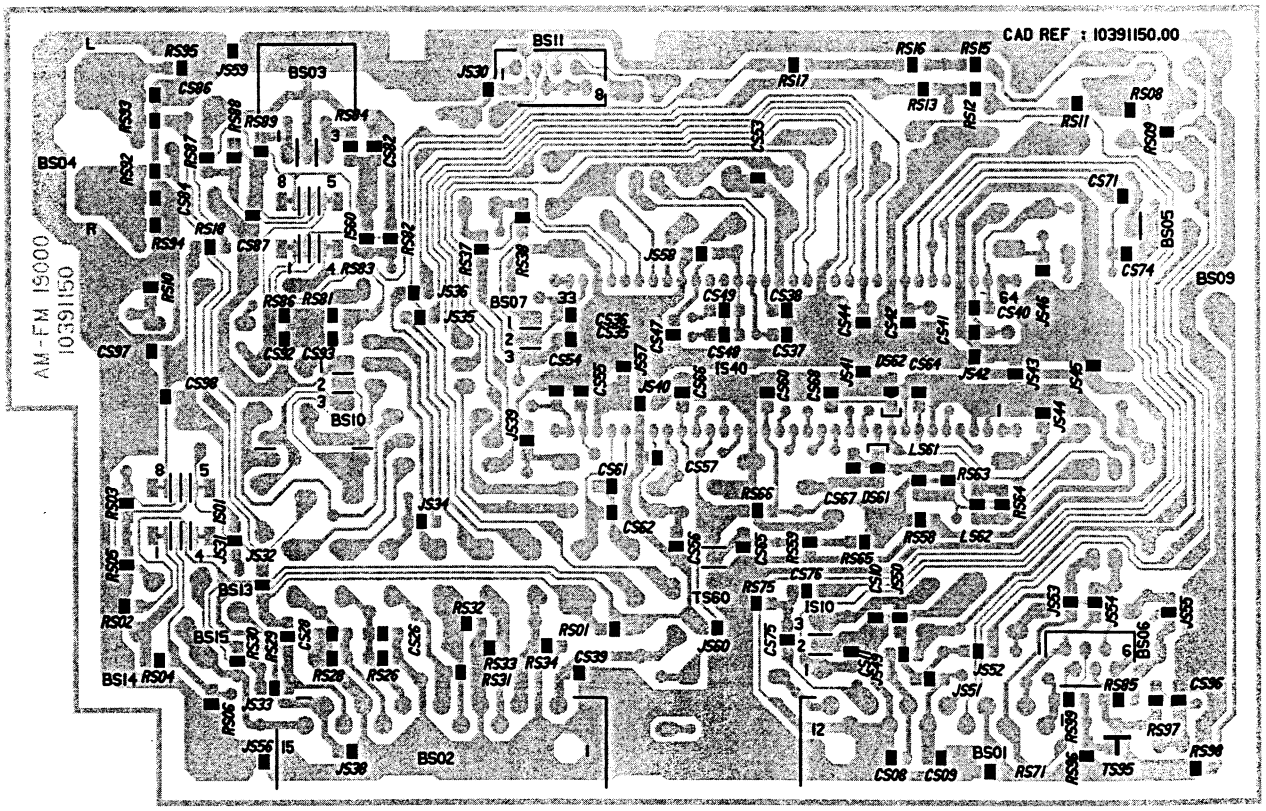

DVT 19000

COMPONENT SIDE - COTE COMPOSANTS - BESTÜCKUNGSSEITE
LATO COMPONENTI - LADO COMPONENTES

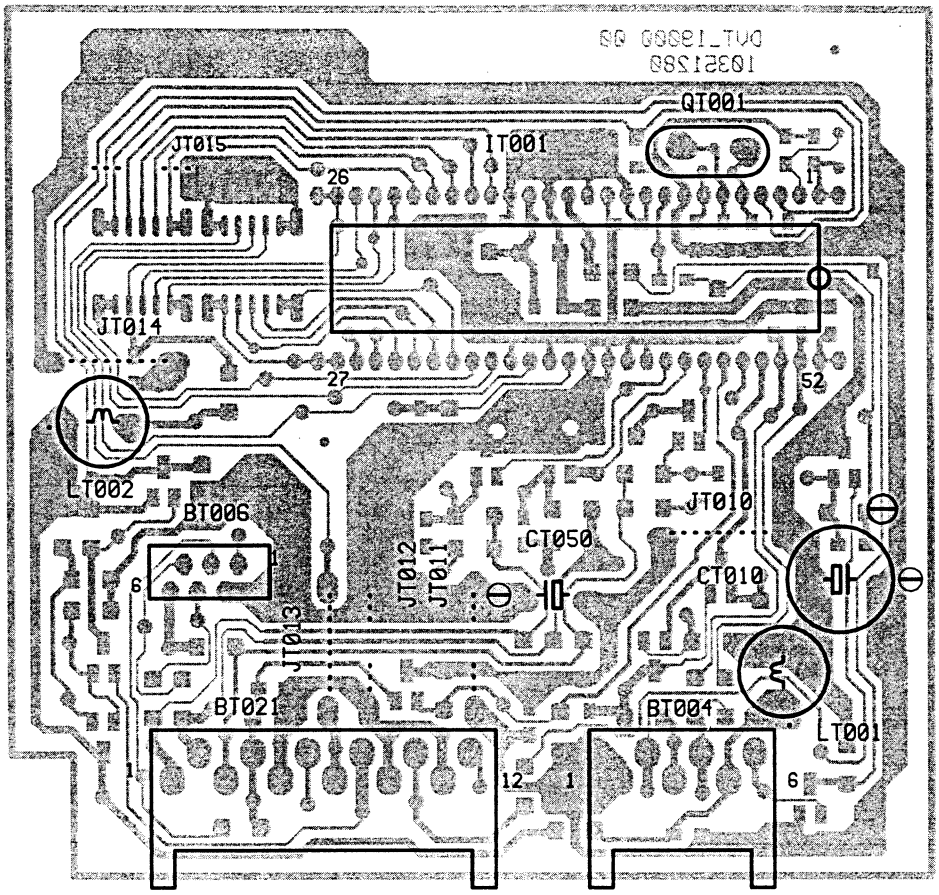

SOLDER SIDE - CÔTE SOUDURES - LÖTSEITE - LATO SALDATURE - LADO SOLDADURAS

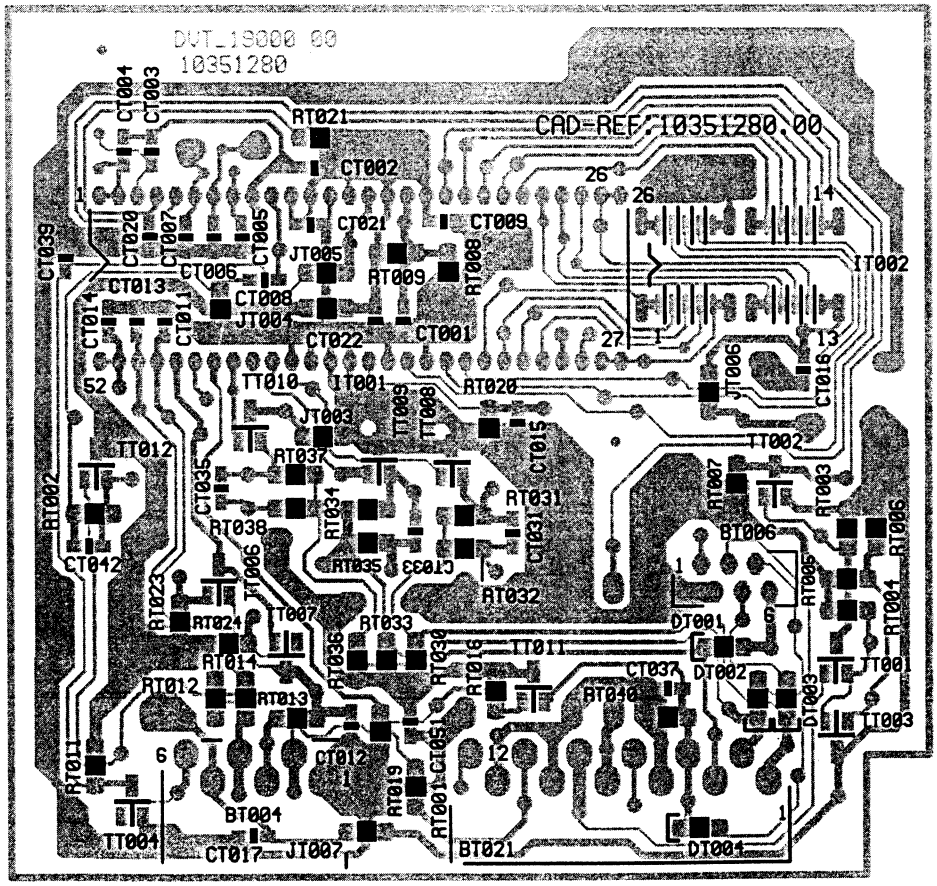

TELETEXT MODULE - MODULE TELETEXTE - VIDEOTEXT MODUL - MODULO TELEVIDEO - MÓDULO TELETEXTO

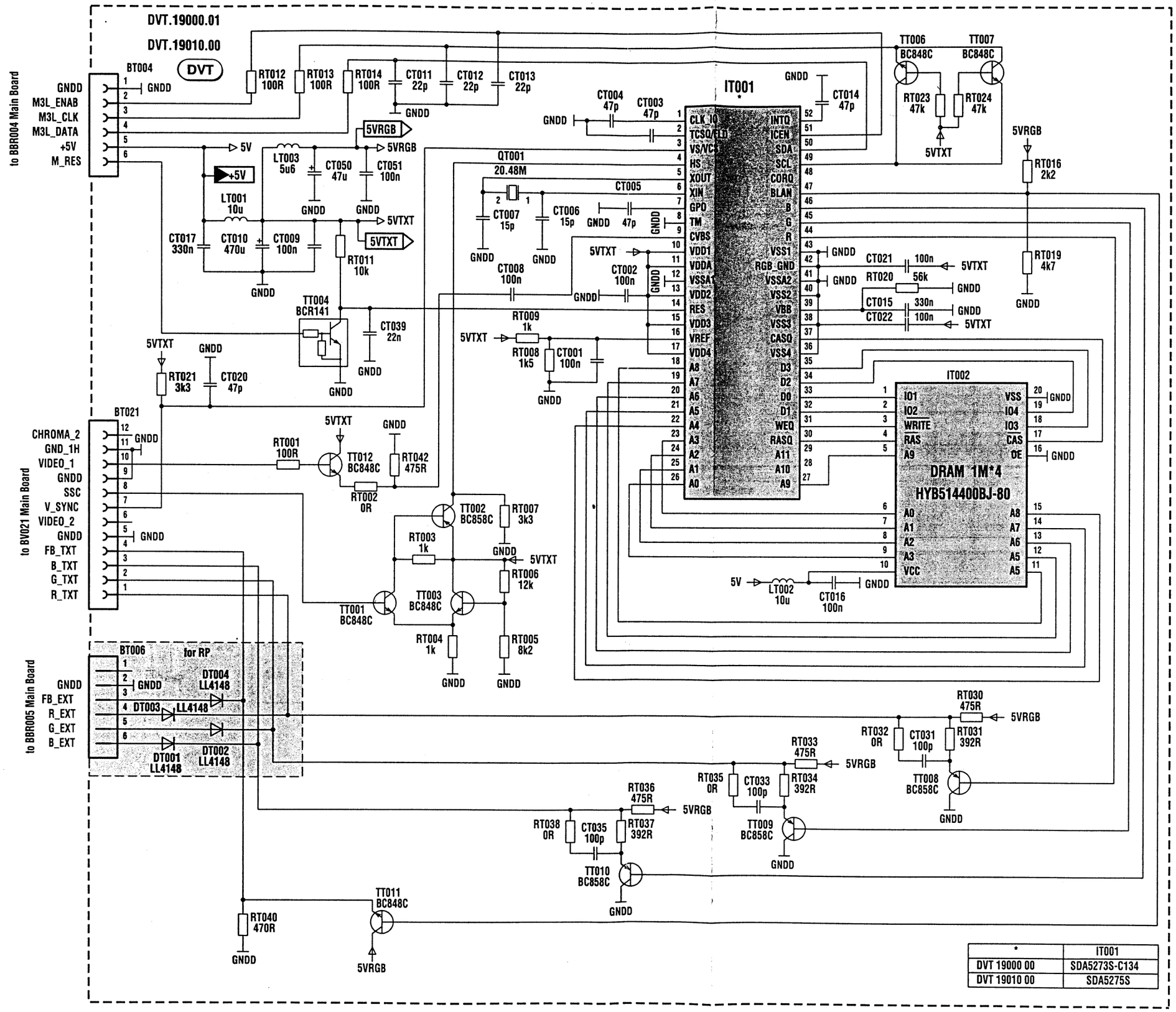

*	IT001
DVT 19000 00	SDA5273S-C134
DVT 19010 00	SDA5275S

SCART INTERFACE MODULE - MODULE INTERFACE PERITELEVISION - SCART INTERFACE - MODULO PRESA PERITEL - MODULO EUROTOMA

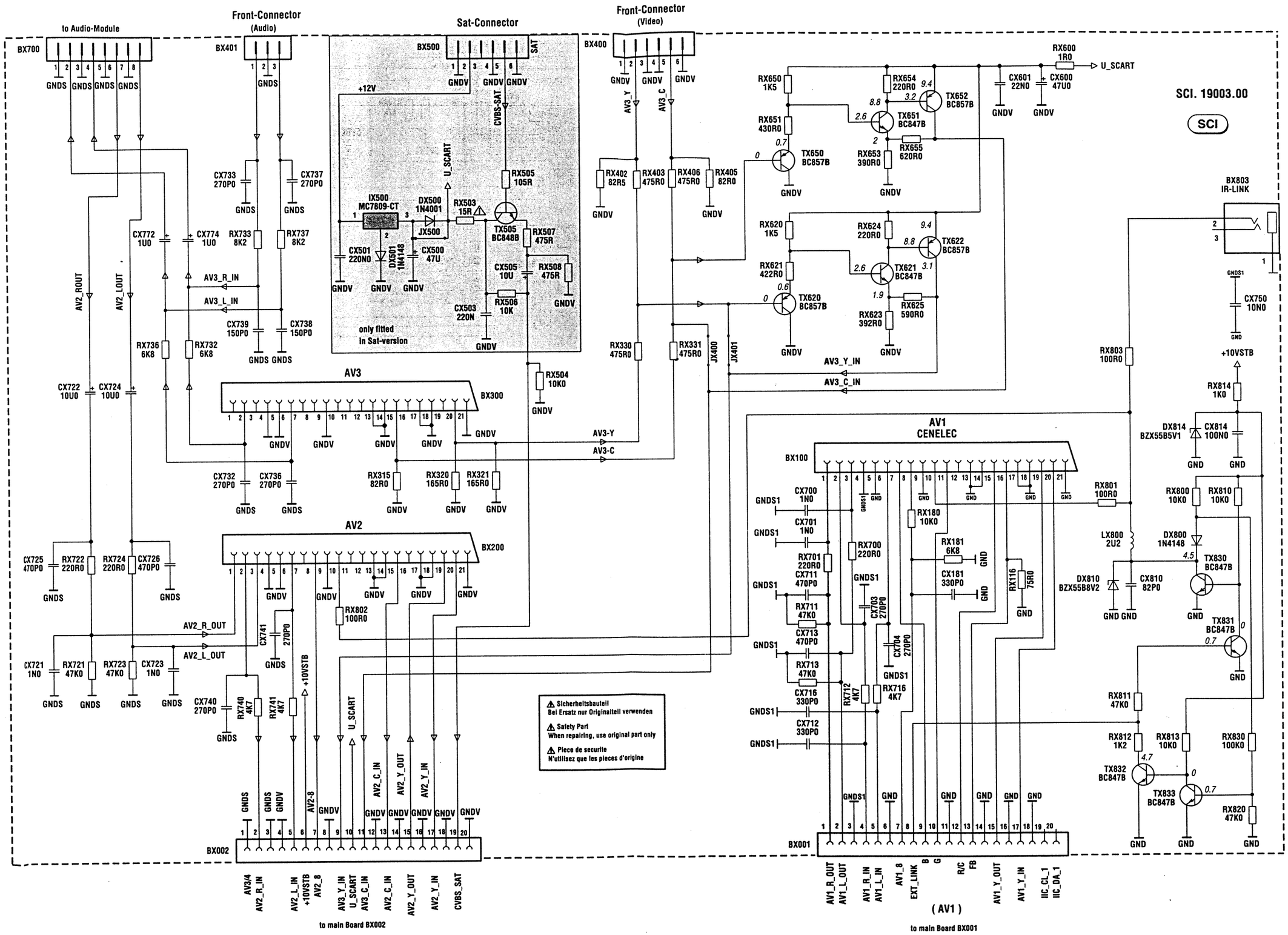

SCI 19003

COMPONENT SIDE - COTE COMPOSANTS - BESTÜCKUNGSSEITE
LATO COMPONENTI - LADO COMPONENTES

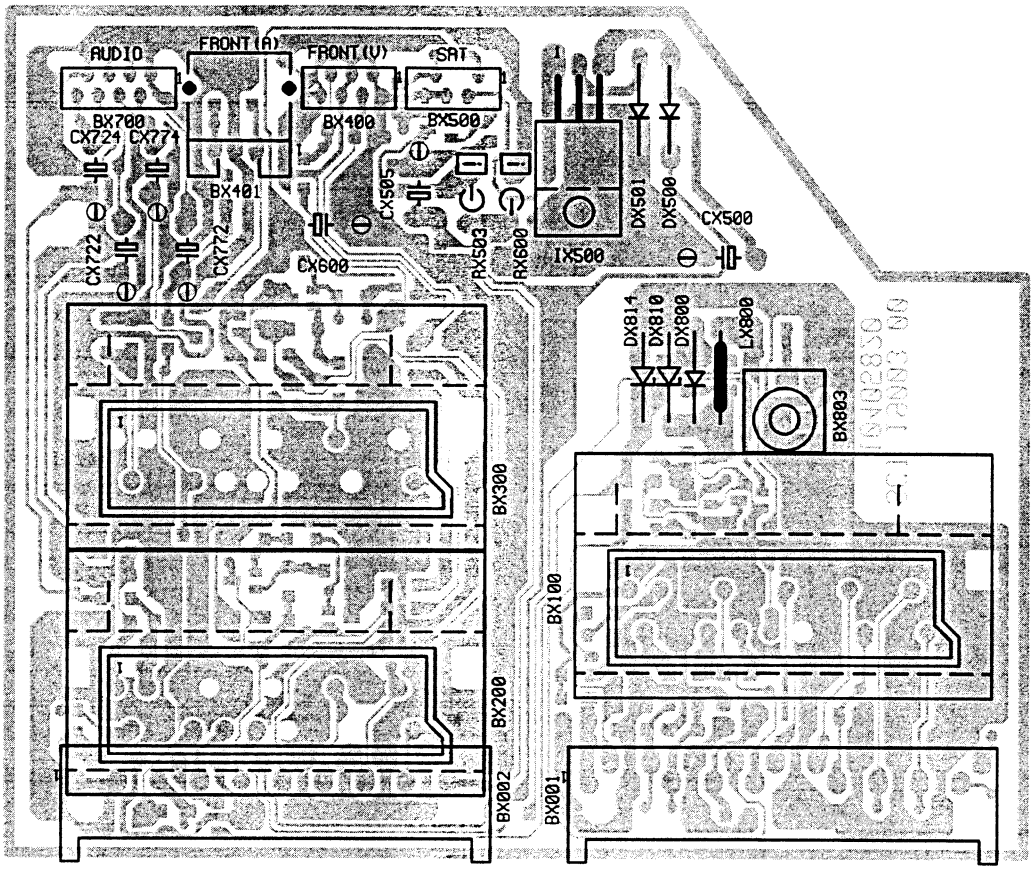

SOLDER SIDE - CÔTE SOUDURES - LÖTSEITE - LATO SALDATURE - LADO SOLDADURAS

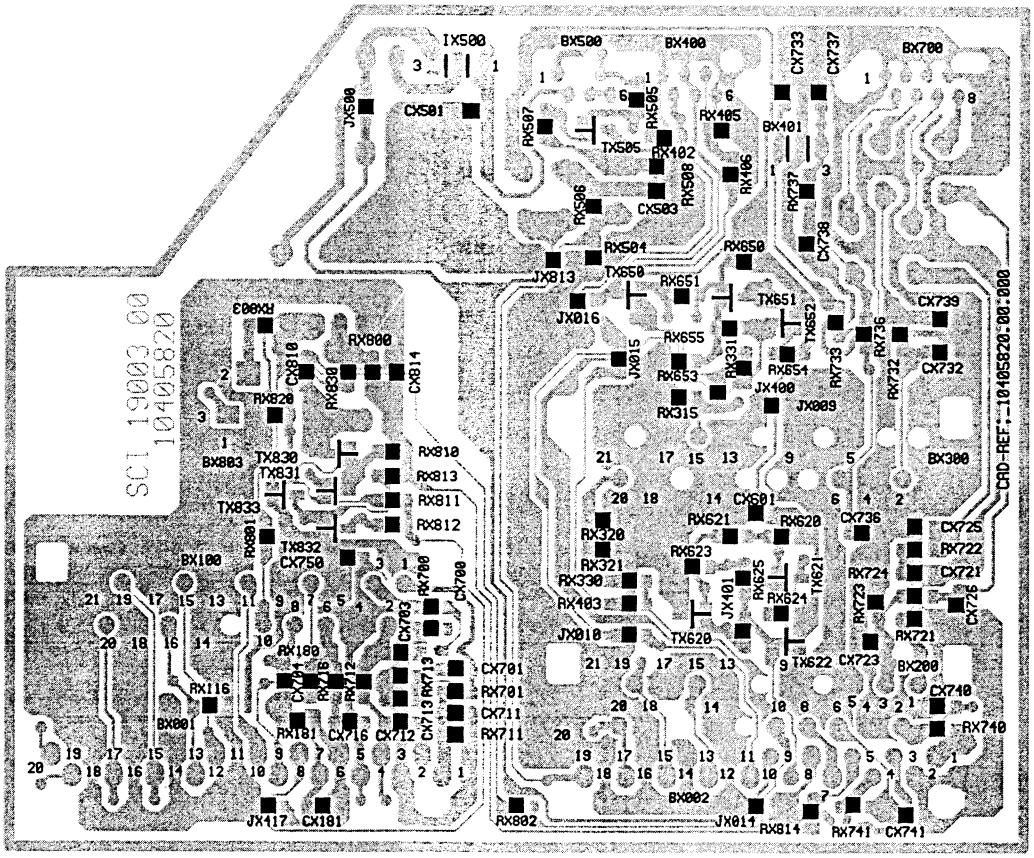

FRONT CONNECTOR BOARD - PRISES EN FACADE ET INTERCONNEXION DU CLAVIER - FRONT ANSCHLUSSPLATTE - PIASTRA CONNESSIONE FRONTALE - PLÁTINA MANDOS FRONTAL

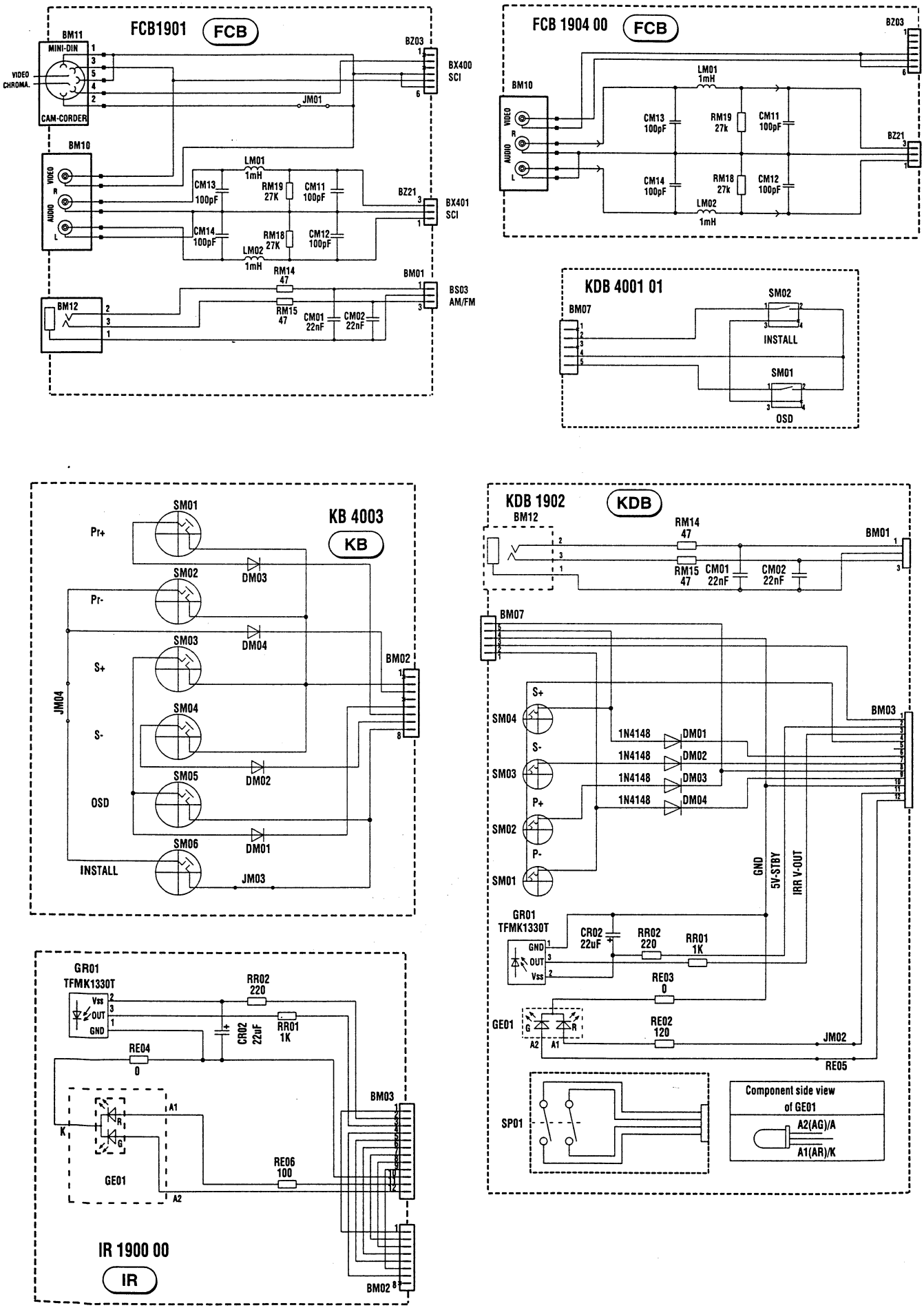

FCB 1901 - FCB 9069

COMPONENT SIDE - COTE COMPOSANTS - BESTÜCKUNGSSEITE - LATO COMPONENTI LADO COMPONENTES

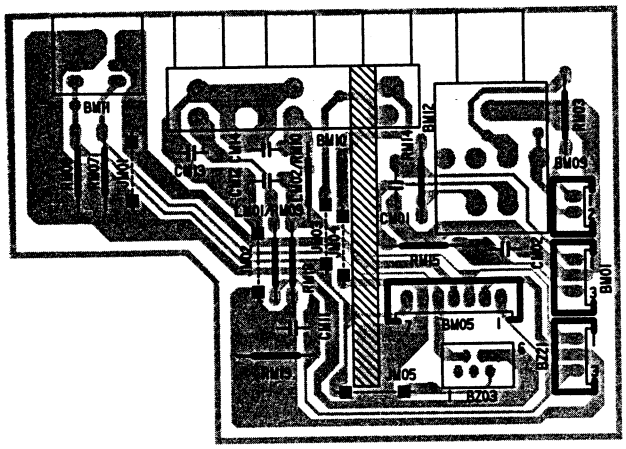

SOLDER SIDE - CÔTE SOUDURES - LÖTSEITE - LATO SALDATURE - LADO SOLDADURAS

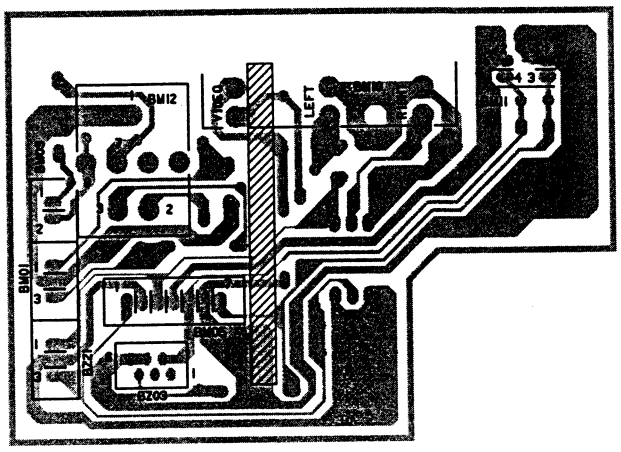

KDB 1902 - KDB 9003

COMPONENT SIDE - COTE COMPOSANTS - BESTÜCKUNGSSEITE - LATO COMPONENTI LADO COMPONENTES

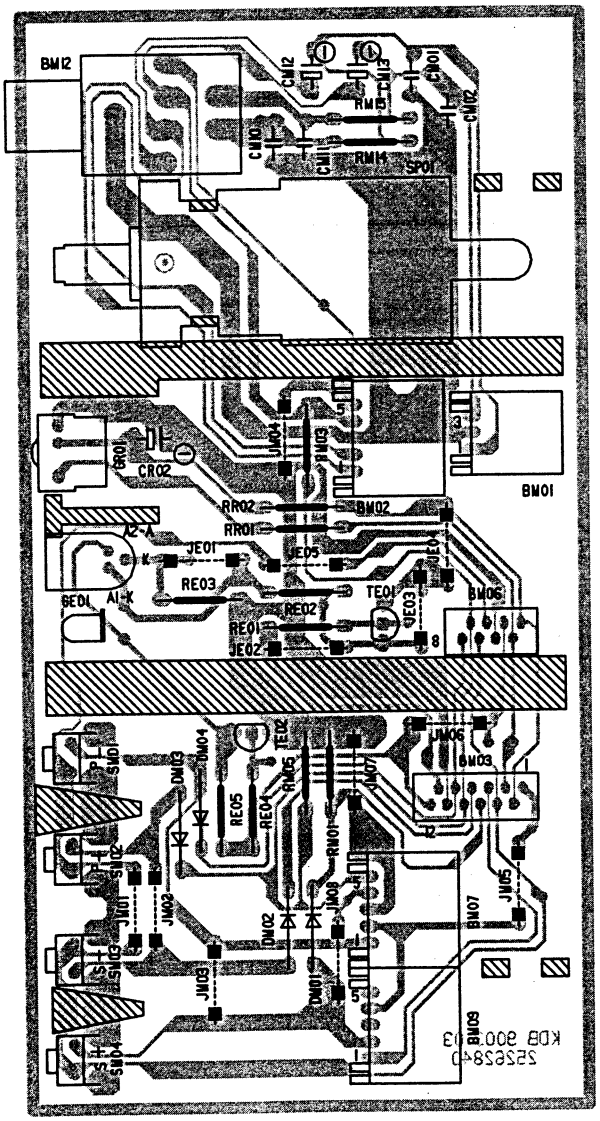

SOLDER SIDE - CÔTE SOUDURES - LÖTSEITE - LATO SALDATURE - LADO SOLDADURAS

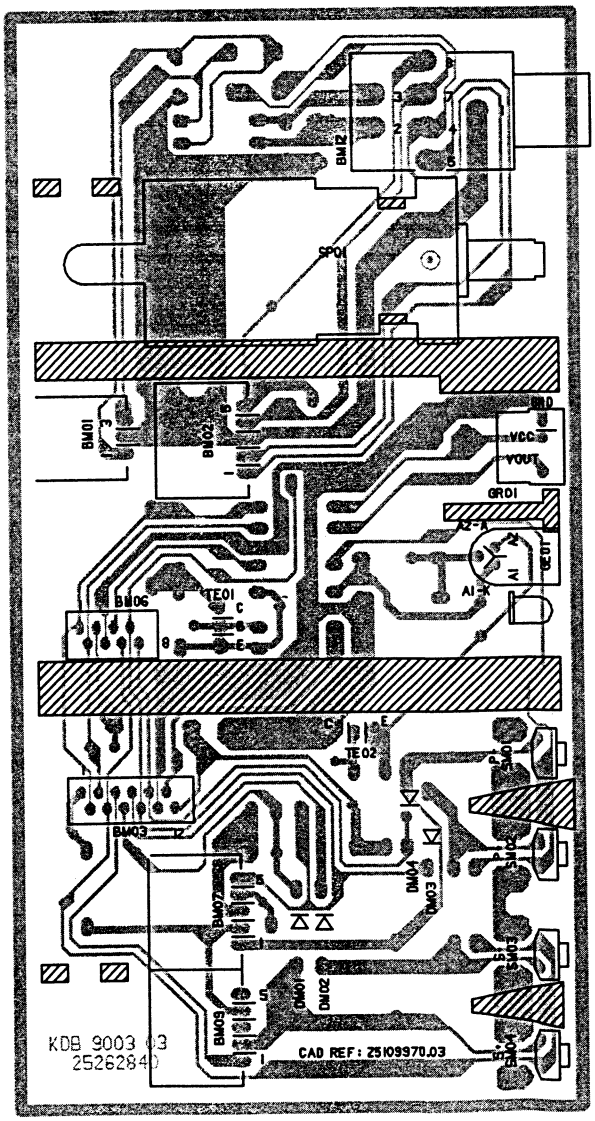

FCB 1904 - FCB 4015

COMPONENT SIDE - COTE COMPOSANTS - BESTÜCKUNGSSEITE - LATO COMPONENTI LADO COMPONENTES

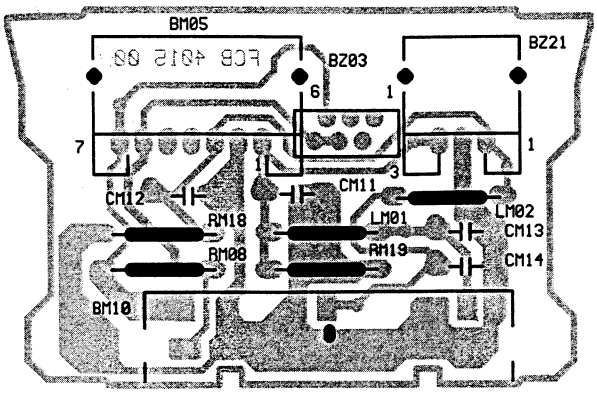

SOLDER SIDE - CÔTE SOUDURES - LÖTSEITE - LATO SALDATURE - LADO SOLDADURAS

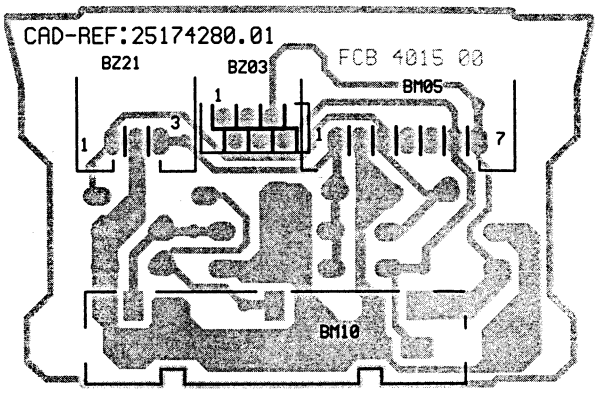

KB4003

COMPONENT SIDE - COTE COMPOSANTS - BESTÜCKUNGSSEITE - LATO COMPONENTI LADO COMPONENTES

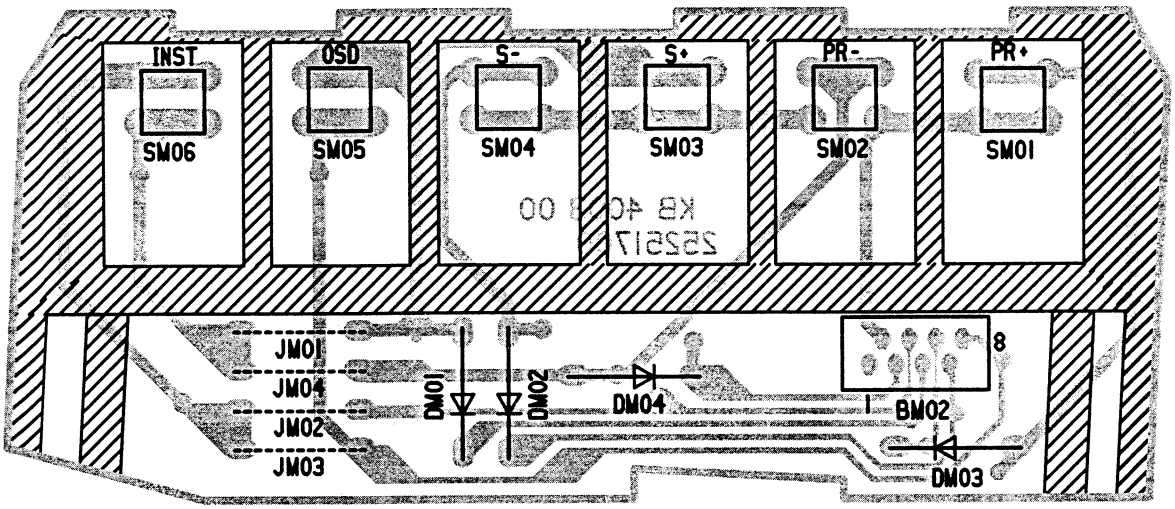

SOLDER SIDE - CÔTE SOUDURES - LÖTSEITE - LATO SALDATURE - LADO SOLDADURAS

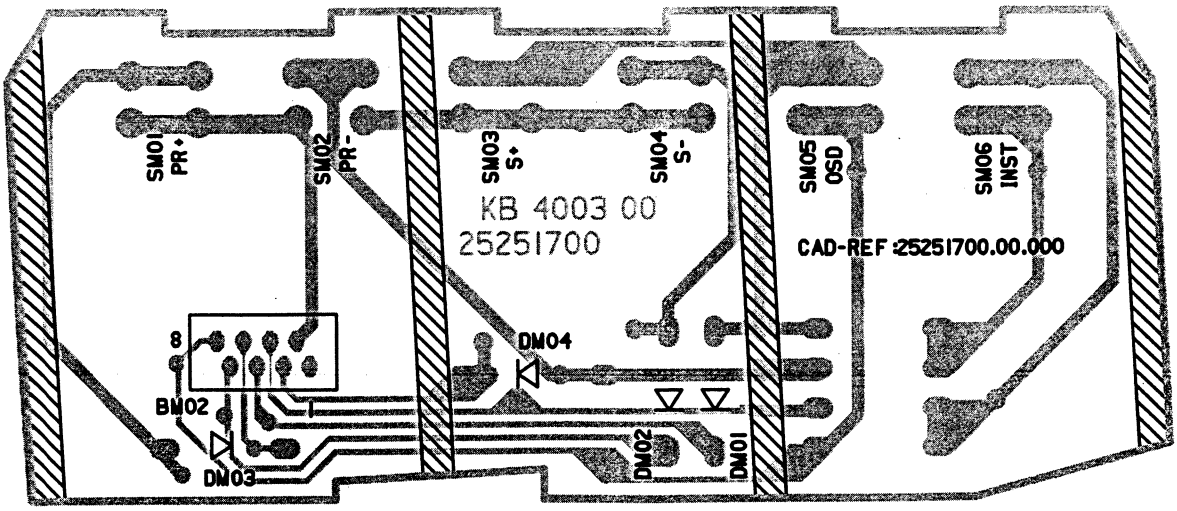

AUDIO SIGNAL/DOLBY MODULE - MODULE AUDIO/DOLBY - TON SIGNAL/DOLBY BAUSTEIN - MODULO AUDIO/DOLBY - MÓDULO AUDIO/DOLBY

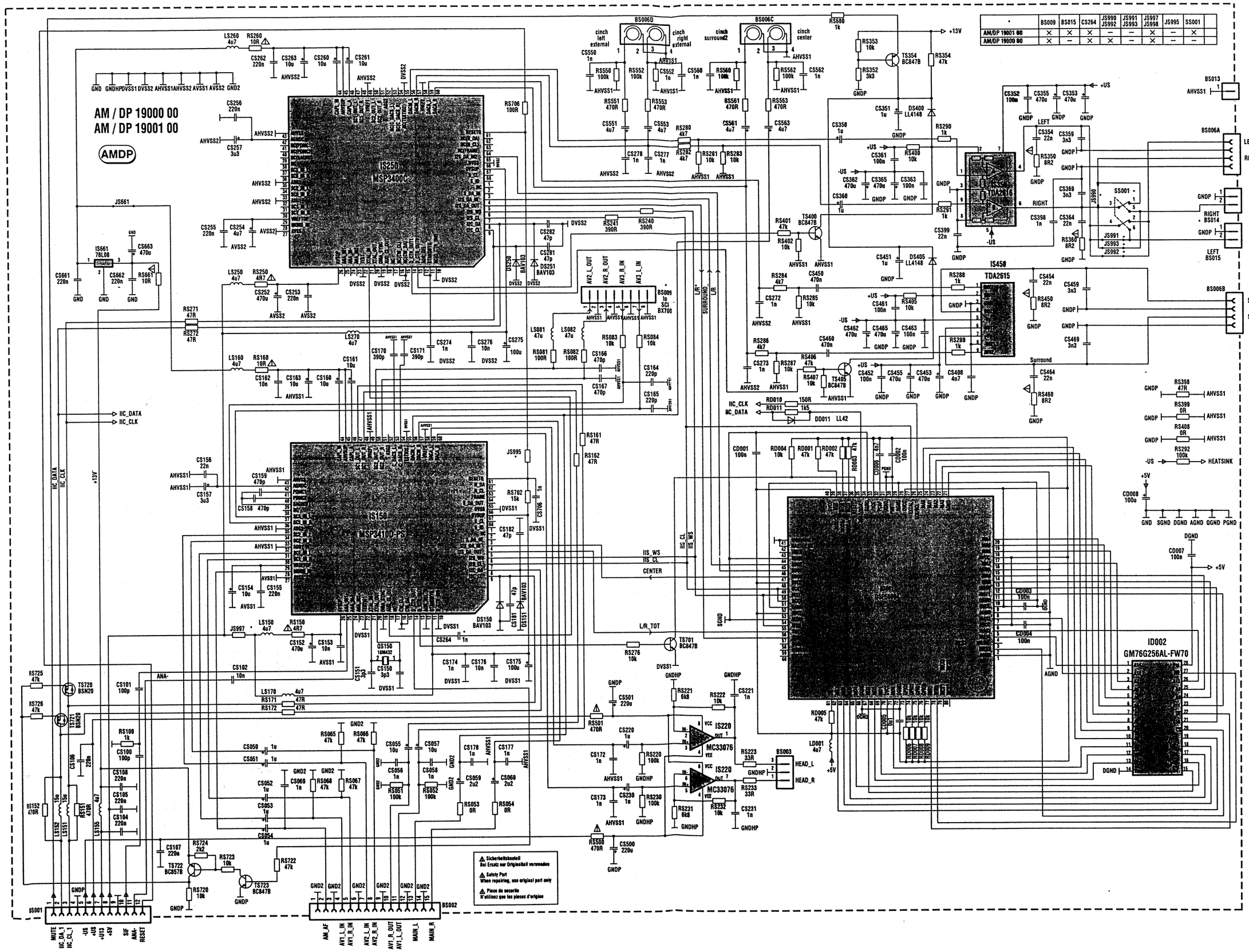

	BS009	BS015	CS264	JS990 JS992	JS991 JS993	JS997 JS998	JS995	SS001
AM/DP 19001 00	X	X	X	–	–	X	–	X
AM/DP 19000 00	X	–	X	X	–	X	–	–

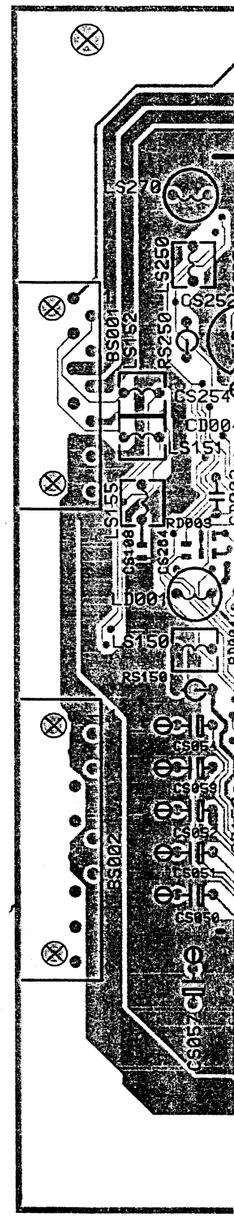

COMPONENT SIDE - COTE COMPOSANTS - BESTÜCKUNGSSEITE
LATO COMPONENTI - LADO COMPONENTES

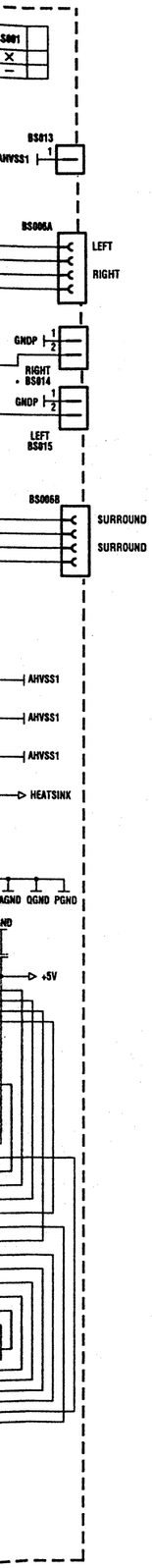

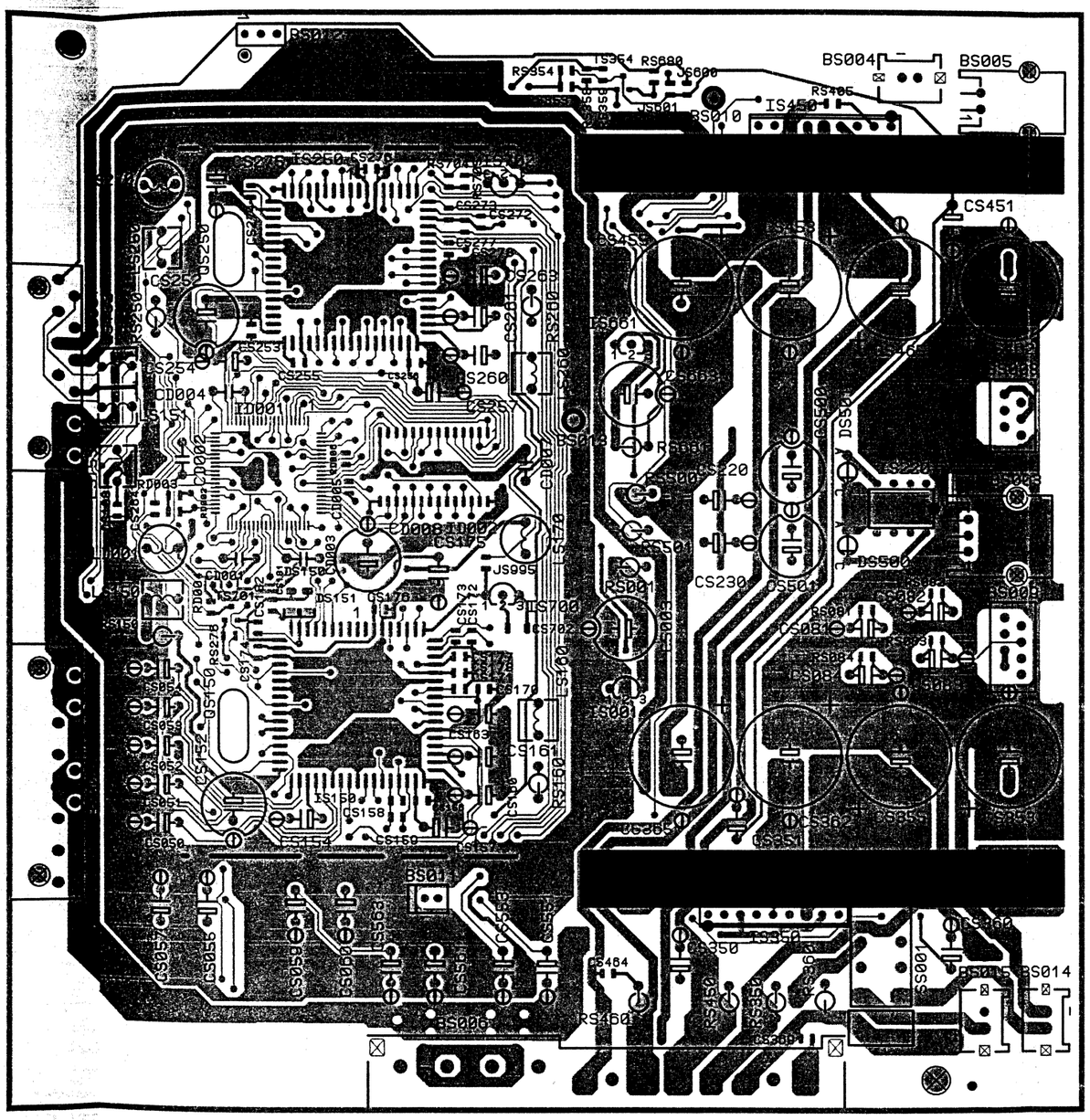

SOLDER SIDE - CÔTE SOUDURES - LÖTSEITE - LATO SALDATURE - LADO SOLDADURAS

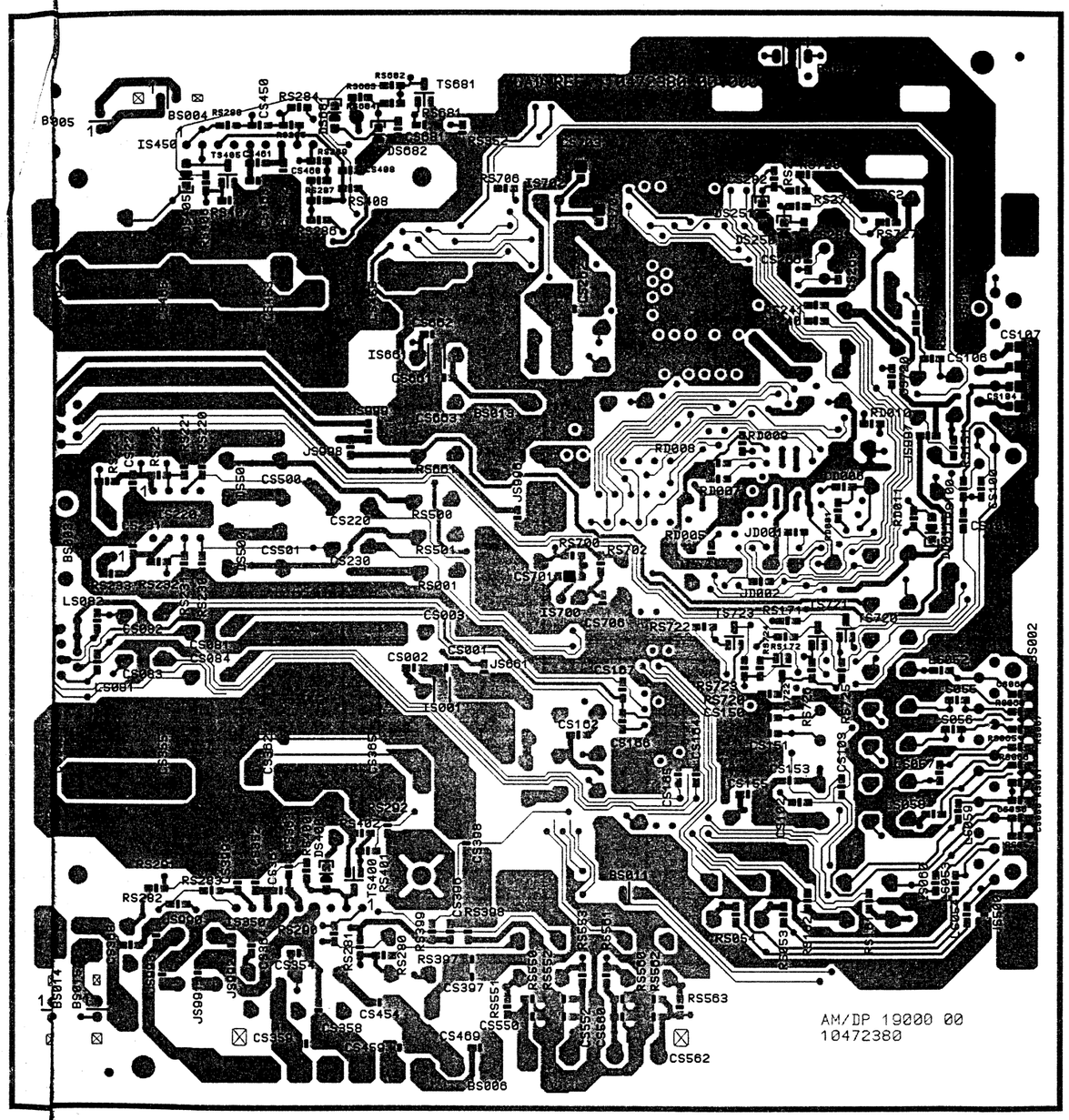

VHF / UHF TUNER CTT5000

(For information only)

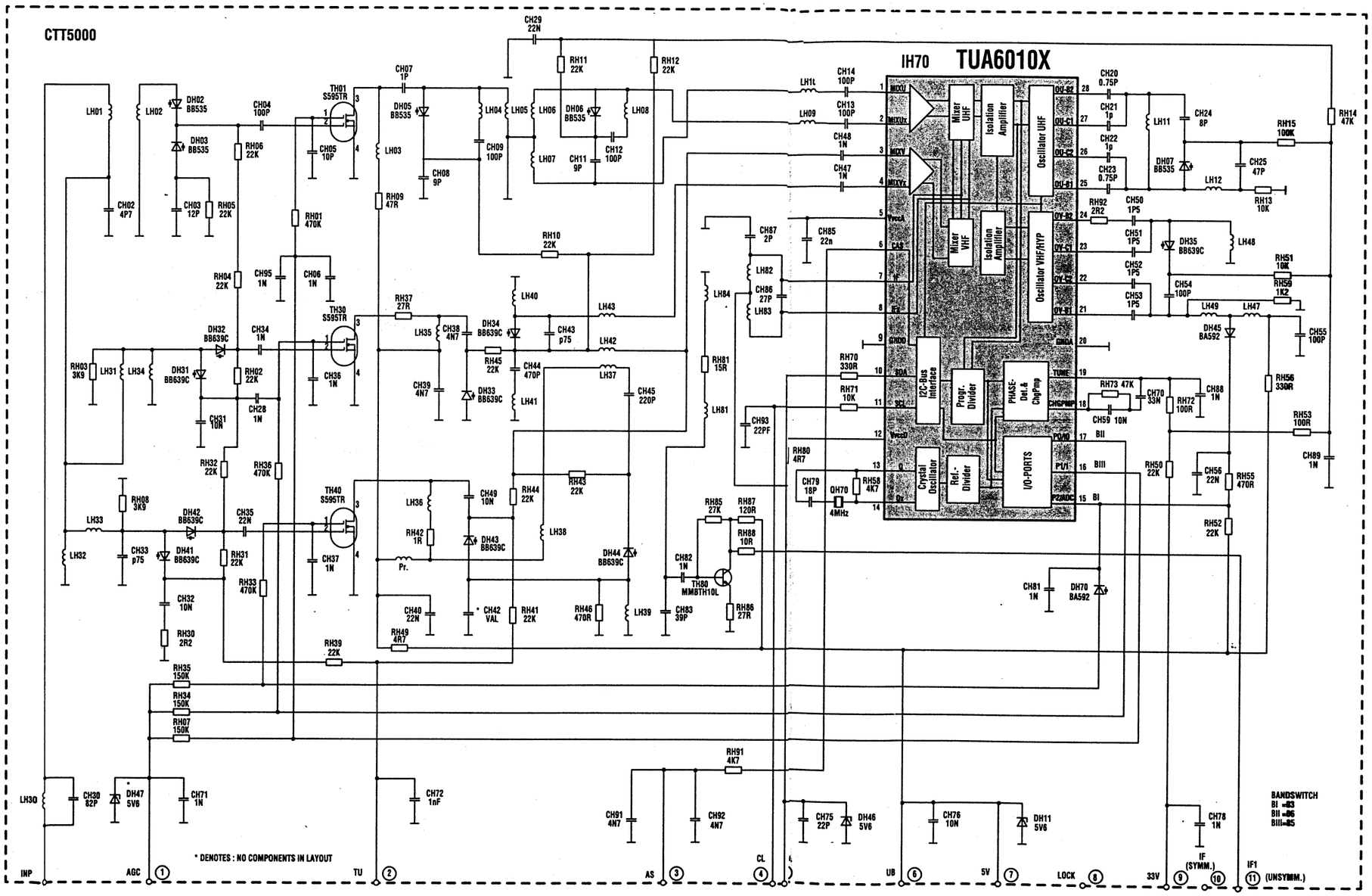

IS40 - MSP3410

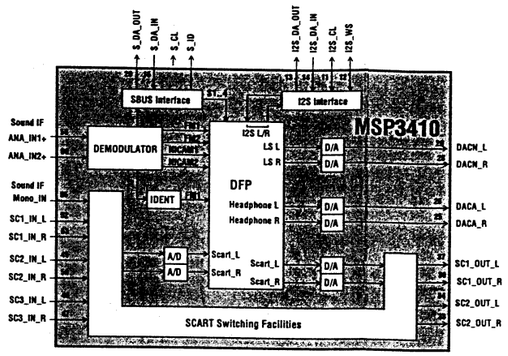

II50 - TDA9811

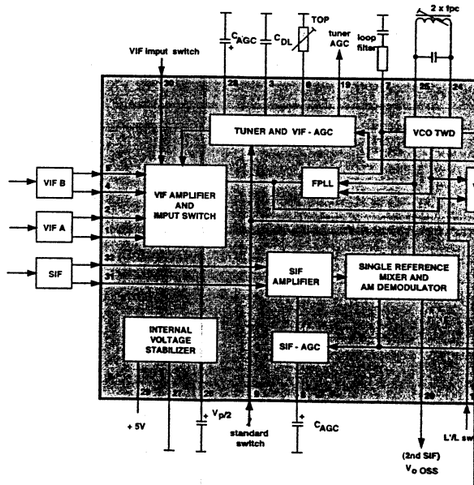

IV602 - TDA466

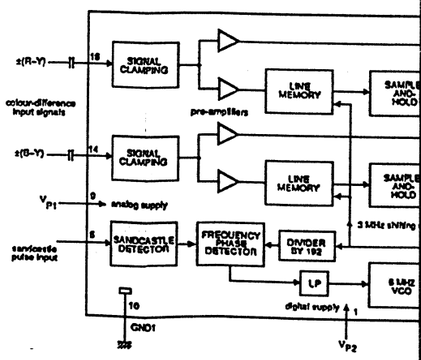

INTEGRATED CIRCUITS BLOCK DIAGRAMS - SYNOPTIQUES INTERNES DES CIRCUITS INTEGRES - INTEGRIERTE SCHALTUNGEN BLOCKSCHALTBILDER
SCHEMA A BLOCCHI DEL CIRCUITI INTEGRATI - VISTA INTERNA DE LOS CIRCUITOS INTEGRADOS

ISP3410

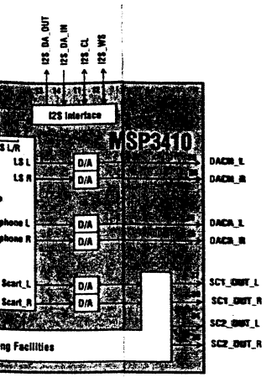

IX900 - TEA6415C

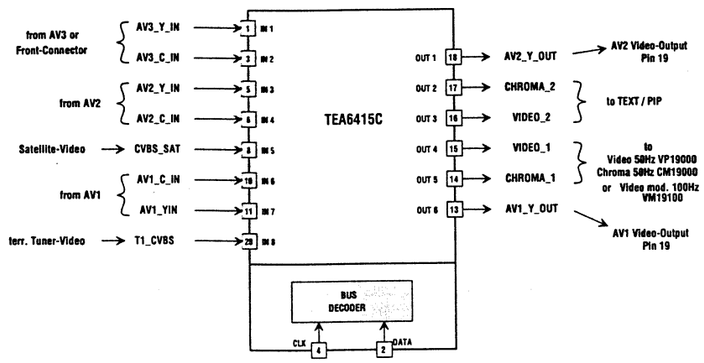

IV601 - TDA9143

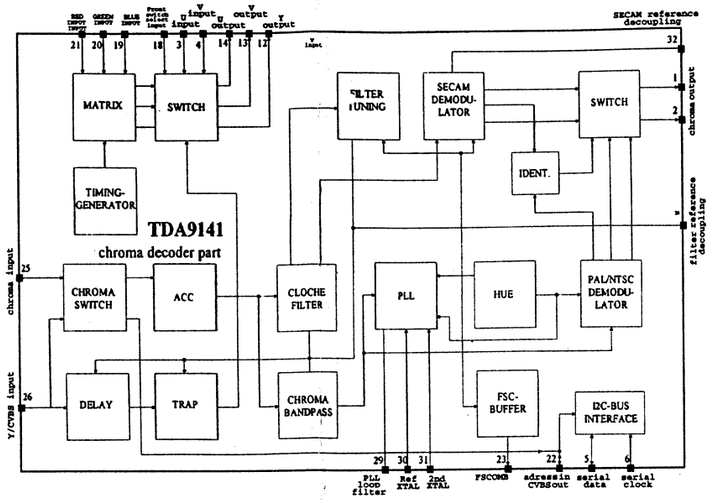

IV001 - STV2165

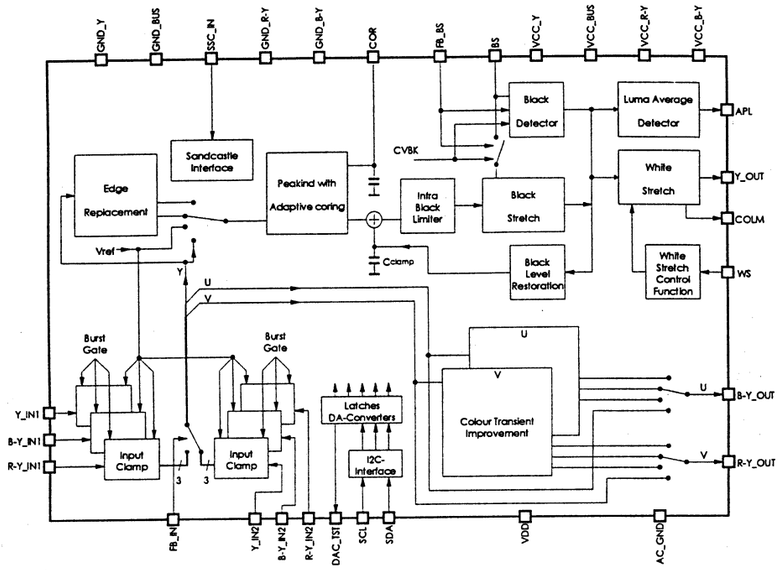

II50 - TDA9811

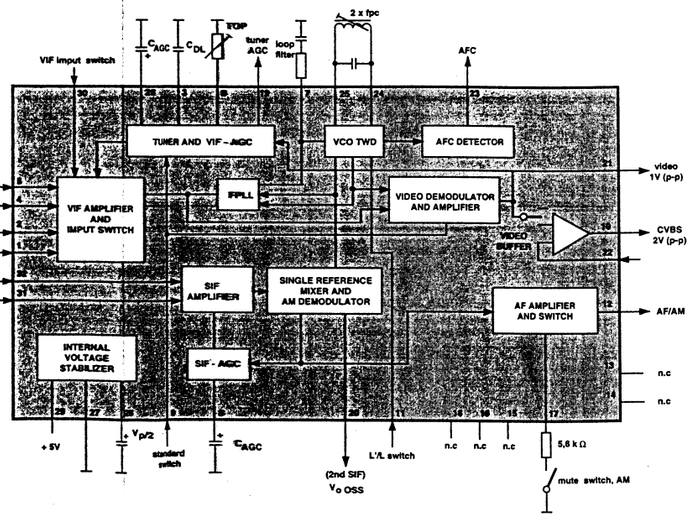

IR01 - ST90R92

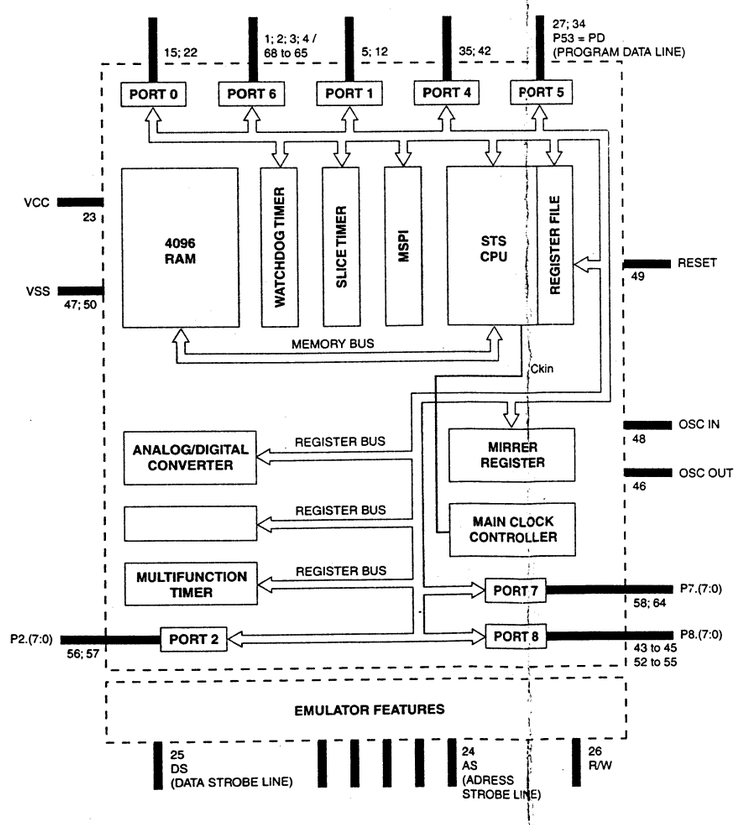

IV308 - DMU0

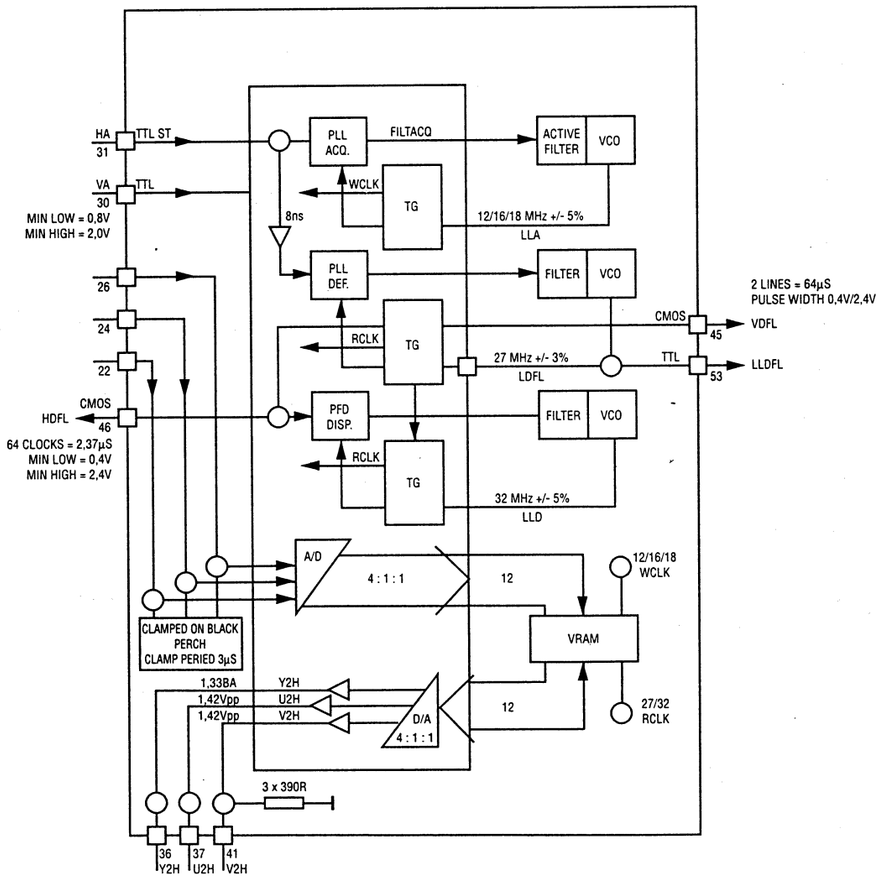

IV602 - TDA4665T

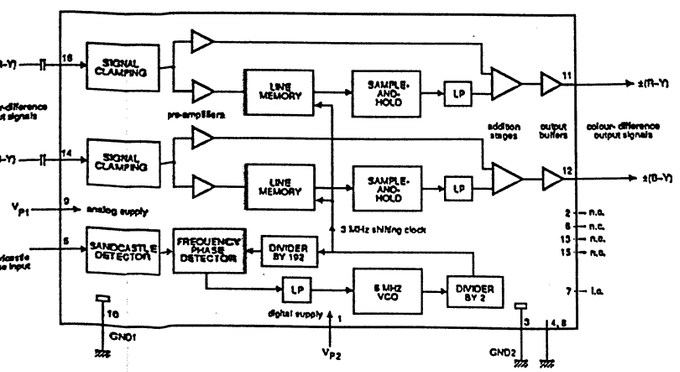

ALLGEMEINE INFORMATIONEN - LED VERHALTEN

LED BLINKZEICHEN

Übermittlung von Informationen
Die Fehler-Codes werden von der roten LED angezeigt.

Zählen Sie die Leuchtimpulse: Sie werden in zwei Blinkfolgen, abgetrennt durch eine Pause von 0,7 sek., eingeteilt und verschiedene Male wiederholt. Zwischen jeweils zwei Codes ist eine Pause von 1,7 sek.

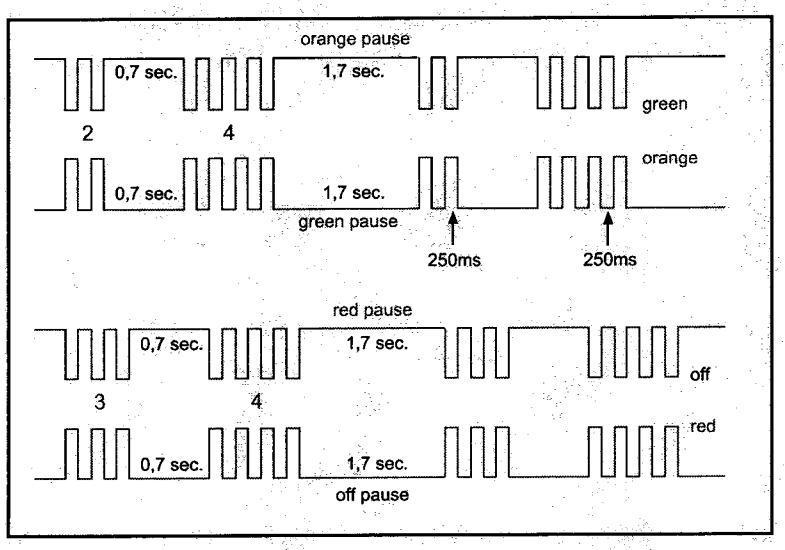

CODES	FEHLER
11	Audio MSP Prozessor antwortet nicht.
12	Zweiter Audio MSP Prozessor antwortet nicht.(Dolby)
13	Audio DSP Prozessor antwortet nicht. (Dolby)
14	IC STV2161/62 antwortet nicht
15	IC STV2151 / TDA9143 antwortet nicht
16	DMU0 Upconverter (Videomodul) antwortet nicht
17	Audio- oder Dolby-modul nicht erkannt
18	TEA6415C antwortet nicht (SCAR T Schalter)
19	Tuner CTT5000 antwortet nicht
21	I2C Bus1 data line ist auf low
22	I2C Bus2 data line ist auf low
23	I2C Bus1 clock line ist auf low
24	I2C Bus2 clock line ist auf low
25	Geschaltete 5V nicht vorhanden
26	Röhre wird nicht rechtzeitig warm
27	Ablenkung meldet 3 mal Fehler. (Problem auf Breathing Leitung)
29	DRAM des Megatext defekt
31	RAM antwortet nicht
32	Ein software-timer wurde angefordert,ist aber noch nicht bereit
33	STV 2165 (PSI 100Hz) antwortet nicht
34	NVM Chip antwortet nicht (X24C32)
35	+13V nicht vorhanden
36	NVM adresse nicht gefunden
37	Unerwarteter Zustand an NMI (Interrupt) line gefunden. (Mögliche Ursache = Röhren-Überschlag")
38	M3L Bus des Megatext blockiert
39	Megatext (SDA 5273) antwortet nicht
41	Bus1 (data line) nicht möglich zu reaktivieren
42	Bus2 (data line) nicht möglich zu reaktivieren
43	MCU (Motion Mastering Up-Converter) antwortet nicht
44	Konvergenz IC (STV2040) antwortet nicht
45	falsches V ideomodul (falscher MCU)
46	NVRAM für Konvergenz antwortet nicht
47	Bildmuster im Konvergenz-IC ist defekt
48	Bildmuster aus dem NVRAM ist defekt
49	Bildrohrtyp "R" ist eigestellt, aber kein Konvergenz-IC gefunden
51	PIP antwortet nicht
52	Falsches Videotextmodul.

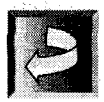

ALLGEMEINE INFORMATIONEN

VORGEHENSWEISE

1 - BEIM EINSCHALTEN

Beobachten Sie das Verhalten der 2-farbigen LED: Merken Sie sich das Einschalt- verhalten und vergleichen es mit den normalen Zyklen.
Hierdurch kann die Zeit bis der Fehlerzeitpunkt und die zu überprüfende Stufe festgestellt werden.

2 - TROUBLE SHOOTING ABLAUF: LED-VERHALTEN

In bestimmten Fällen leuchtet die LED zum Übertragen einer Fehlerinformation auf:
LED Aufleuchten: Übertragung der Fehlerinformation
Zählen der Fehlerinformation: Kodiert in zwei Impulsbündeln, unterbrochen durch 0,7 s Pause.
Dieses wiederholt sich mehrere Male.

Sehen Sie in der Fehlercodetabelle

Diese Informationen sind genauer als Farbänderungen aber unvollständig, da verschiedene Ursachen denselben Code verursachen.

HINWEIS:
Im Service Mode ist es möglich die letzten Fehler-Codes aufzurufen, die sich in dem Fernsehgerät ereignet haben.

3 - FEHLERSUCHE

Funktionen der Stufen 1 und 2: Messungen mit dem Oszilloskop sind für die beiden separaten Vorgänge durchzuführen.

a - Das Gerät arbeitet ganz oder teilweise:
- Benutzen Sie die LED Informationen der Fehlersuchmethode 1 und 2.
Schauen Sie ebenfalls bei Fehlersuche nach Symptomen nach.

b - Das Fernsehgerät schaltet permanent oder periodisch ab:
- Beobachten Sie das LED-Verhalten (rotes Aufleuchten, konstantes orange gefolgt von Aufleuchten, usw.)
Wählen Sie das zutreffende Kästchen in der Spalte: Fehlersuche durch LED-Verhalten.

INFORMATIONEN

Fernsehgeräte mit dem Chassis ICC19 arbeiten teilweise auch ohne die Module DVT, Sound, CRT, Chroma (50Hz) und VM Video (100Hz).

Dieser Punkt kann hilfreich sein wenn das Videomodul das Gerät in den Schutz-Mode schaltet.

Sehen Sie in die Geräte Konfigurationstabelle

GENERAL INFORMATION - LED BEHAVIOUR

LED FLASHES

Message transmission.
The Error codes are signalled by the RED Standby LED.

Count number of flashes : error code is signalled in two burst separated by a 0.7 s pause and repeated several times.
There is 1.7 s between each code sequence .

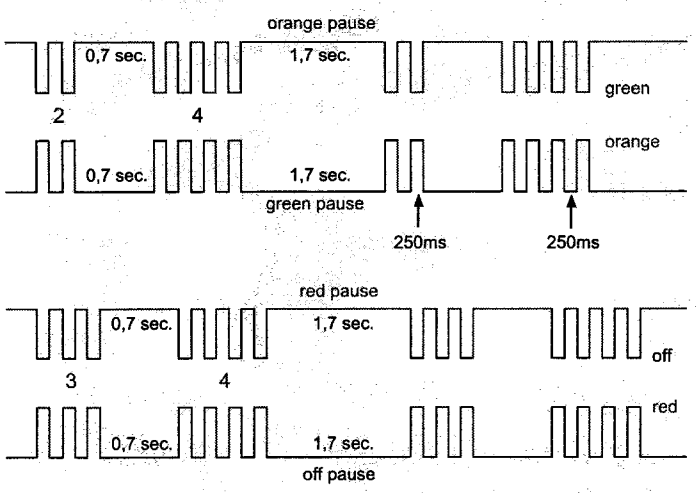

CODES	DEFAUT
11	1st Audio_MSP doesn't answer
12	2nd Audio-MSP doesn't answer
13	Audio-DSP doesn't answer
14	Video IC STV2161/2 doesn't answer
15	Chroma IC 2151/9143 doesn't answer
16	Upconverter DMU0 doesn't answer
17	Audio (or Dolby) module not detected
18	SCART IC TEA6415C doesn't answer
19	Tuner CTT5000 doesn't answer
21	I2C Bus1 data line held low
22	I2C Bus2 data line held low
23	I2C Bus1 clock line held low
24	I2C Bus2 clock line held low
25	Switched 5V not available
26	Tube doesn't get warm in time
27	Deflection detects >3 times protection (problem detected on "breathing" line)
29	DRAM memory of Megatext defect
31	RAM is full
32	A Software-timer has been requested, bus is not available yet
33	The PSI chip (STV2165) doesn't answer
34	The NVM (X24C32) chip doesnt answer
35	13V not available
36	Wrong addr. NVRAM passed to the bus-handler
37	Unexpected level on NMI (Interrupt) line found (possible cause : tube flashover)
38	M3LBus for Megatext is blocked
39	Megatext (SDA5273) doesn't answer
41	bus1 Data line not recoverable
42	bus2 Data line not recoverable
43	MCU (Motion Mastering Up-Converter) doesn't answer
44	Convergence IC (STV2040) doesn't answer
45	Defect "Video Module" is detected
46	"Default" NVRAM of DCU doesn't answer
47	Test Pattern chip of DCU defect
48	Test Pattern NVRAM convergence chip defect
49	Convergence module doesn't answer anymore
51	PIP Module doesn't answer
52	The Teletext module is not conform.

GENERAL INFORMATION

METHODOLOGY

1 - SWITCHING "ON" THE TV :

- Observe the behaviour of the two-coloured LED: note the various stages and compare them with the normal cycle of events.
By watching this, the point at which the problem arises and the part of the circuit which needs to be investigated can be identified.

2 -TROUBLE SHOOTING PROCEDURE: LED BEHAVIOUR

In certain cases a flashing LED signifies the transmission of an error code message:

LED flashes : message transmission.

Count the flashes : coded into two bursts separated by a pause of 0.7 s and repeated several times.

See the error code table.

This data is more precise than LED colour changes, however, since various fault conditions generate the same error code the information signalled may be imcomplete.

Please Note :
In the service mode, it is possible to consult a record of the last error codes which have occurred in the television set.

3 - FAULT FINDING :

Operation stages 1 and 2: an oscilloscope test is carried out according to two separate processes.

a - The television set operates fully or partially
- Use LED message observation fault finding methods 1 and 2. See also the fault related to fault finding by symptom.

b - The television set goes into permanent or cyclical security mode
- Observe LED behaviour (flashing red, stable orange followed by flashing, etc.).
Select the relevant box in the column (LED behaviour fault finding).

INFORMATION

The ICC19 television will partially operate without the DVT, SOUND, CRT, CHROMA (50 Hz) and VM video (100 Hz) modules remoded.
This point may be useful if the video module causes the TV to switch to security mode.

See the television configuration table.

[*pr76Y

FEHLERSUCHE IM RPC19

- Achtung! Jede der vorgeschlagenen Manipulationen muß bei abgeschaltetem Gerät durchgeführt werden (Hauptnetzschalter aus).
  Alle Arbeiten, die bei eingeschaltetem Gerät durchgeführt werden, können Bauteile zerstören!
- Einen Trenntrafo verwenden.

Überprüfung der digitalen konvergenzeinheit

- Der IC sollte eine ordnungsgemäße 5 V-Versorgung besitzen.
- PWAT Pin 26 von IK01 muß >+4 V sein, andernfalls bleibt der IC im Reset.
- Die +-15 V-Versorgung von PS muß anliegen und >13 V sein.
- H- und V-Synchronisierung müssen an Pin 22 und Pin 55 von IK01 anliegen
- Am Pin 40 (REFO) muß +1 V anliegen.
- An den Pins DABV, DAGV und DARV (43, 44 und 45) von IK01 muß +1 V anliegen.
- An den Pins DABH, DAGH und DARH (49 und 50) von IK01 muß +1 V anliegen.
- An Pin 14 (ECLK) von IK01 muß ein 8,5 MHz-Takt anliegen.

Überprüfen des Konvergenznetzeiles

Arbeiten an einem defekten Gerät sind nur mit einem **Trennnetztransformator** zulässig.
Wenn kein Konvergenzbild am Bildschirm angezeit wird, so können Sie das Konvergenznetzteil für sich prüfen.

Führen Sie folgende Schritte durch:

1. Netz ausschalten.
2. Die Verbindung von BP260 zwischen der DCU-Platine und der Konvergenz-Spannungsquelle abziehen.
3. Einen Widerstand von 270R/10W zwischen +15 V und - 15 V anschließen (zum Beispiel zwischen die Kathode von DP267 und der Anode von DP265).
4. Den Kollektor und den Emitter von TP238 miteinander verbinden.
5. Netz einschalten.

Name / Position	DC-Wert(V)
CP210	298,0
DP213	33,2
CP240	16,9
CP243	-25,4
CP233	15,3
Pin 5 von IP250	30,3
Pin 4 von IP250	0,0
Kollektor von TP233	0,9
CP268	14,9
CP266	-14,9
CP262	58,7
CP264	57,9
CP271	0,0
DCU_SAFE	0,0
RP271	0,0
Pin 1 von TP250	0,0
CP210	298,0

TROUBLESHOOTING RP C19

- All of the following tests must be carried out with the MAINS switched OFF.

Any operations carried out with the MAINS switched ON may lead to components being destroyed.
- Use isolating mains transformer.

DIGITAL CONVERGENCE UNIT CHECK

- IC should have correct +5V supply
- PWAT pin 26 of IK01 must be >+4V otherwise the IC is kept in reset.
- The + - 15V from the PS must be present and >13V
- H and V sync must be present pin nr. 22 and 55 of IK01
- at the pin REFO nr. 40 + 1V must be present.
- at the pins DABV, DAGV, DARV, nr.43, 44and 45 of IK01 +1V must be present
- at the pins DABH, DAGH, DARH nr.48, 49 and 50 of IK01 +1V must be present
- at the pin ECLK nr. 14 of IK01 a 8.5Mhz clock must be present

DIGITAL CONVERGENCE UNIT POWER SUPPLY TROUBLESHOOTING

If you have not a convergence picture on the screen it's possible to check the convergence power supply for itself.

Do the following steps.

1. Switch off the mains
2. Remove the connection of BP260 between the DCU board and the convergence power supply
3. Connect a resistor of 270R/10W between +15V and -15V. For examplee cathode of DP267 and anode of DP265.
4. Make a short circuit between collector and emitter of TP 238.
5. Switch on the mains.

Name / Position	DC value / V
CP210	298.0
DP213	33.2
CP240	16.9
CP243	-25.4
CP233	15.3
Pin 5 of IP250	30.3
Pin 4 of IP250	0.0
Collector of TP233	0.9
CP268	14.9
CP266	-14.9
CP262	58.7
CP264	57.9
CP271	0.0
DCU_SAFE	0.0
RP271	0.0
Pin 1 of TP250	0.0
CP210	298.0

ÜBERPRÜFEN DER STROMVERSORGUNG UND AUFFINDEN EINES SCHUTZSCHALTUNGSFEHLERS

Achtung! Jede der vorgeschlagenen Manipulationen muß bei abgeschaltetem Gerät durchgeführt werden (Hauptnetzschalter aus).

Alle Arbeiten, die bei eingeschaltetem Gerät durchgeführt werden, können Bauteile zerstören!

Für die Analyse von Schutzschaltungsproblemen kann folgende Konfiguration verwendet werden.
In diesem Zustand arbeitet die Stromversorgung in normalem Regelzyklus, jedoch ohne Ablenkung und ohne Schutzschaltungsinformationen, damit der Grund für Probleme gefunden werden kann.

- Haupschalter aus
- CP170 Kurzschluß (K/6)*
- JL010 entfernen (M8)* oder Pin6 von LL08 ablöten
- Widerstand 75 Ohm (4W) zwischen +Vs und -Vs löten (L.M/4-5)*

↓

- Gerät eingeschaltet: Mit folgender Konfiguration gemessen

↓

U Syst :	50 Hz 131V	50Hz 132	50Hz 137V	100Hz 134V	100 Hz 137V	100 Hz 140V
Usyst (P/5)* (V+/-5V)	131.5	133	138	134.3	141	140
U vert / CP130 (P/4)* (V)	13	14.2	14.2	12.7	12.8	11.8
+Us / -Us (L/5-4)* (V)	6.4	6.4	6.4	8	8.3	6
7V / CP140 (J/3-4)* (V)	4.3	8.6	8.6	6.8	7.4	6.4
10V SBY/ K DP133 (N/5)* (V)	10.6	11.2	11.2	10.2	10.4	9.3
Vcc1 / 44-IV001 (J/7)* (V)	7.8	7.9	7.9	7.9	7.9	7.8
UVFB / K DL043 (K/8)* (V)	13.3	14.5	14.5	12.7	12.8	11.1
13V / CL042 (J/8)* (V)	0	0	0	0	0	0
200V / CL046 (P/6)* (V)	0	0	0	0	0	1.1
5V / CP143 (H/3)* (V)	0	0	0	0	0	0.2

(*) Lage des Bauelements

Schaltbild nur von der Schutzschaltung.

POWER SUPPLY CHECK AND FIND «PROT» FAILURE

All of the following tests must be carried out with the MAINS switched OFF.

Any operations carried out with the MAINS switched ON may lead to components being destroyed.

to analyse a «PROT» fault condition it is possible to use the following test configuration.
In this configuration the power supply will be working with its normal regulation loop, the deflection stage and any "PROT" information is disabled in order to locate the cause of the problem.

- MAINS switched «OFF»
- CP170 short-circuited (K/6)*
- JL010 removed (M/8)* or desolder Pin 6 of DST (LL08)
- Connect a R= 75 Ohms (4W) between +Vs and -Vs (L-M/4-5)*

↓

- Switch «ON» TV : Measure the following voltages.

↓

U Syst :	50 Hz 131V	50Hz 132	50Hz 137V	100Hz 134V	100 Hz 137V	100 Hz 140V
Usyst (P/5)* (V+/-5V)	131.5	133	138	134.3	141	140
U vert / CP130 (P/4)* (V)	13	14.2	14.2	12.7	12.8	11.8
+Us / -Us (L/5-4)* (V)	6.4	6.4	6.4	8	8.3	6
7V / CP140 (J/3-4)* (V)	4.3	8.6	8.6	6.8	7.4	6.4
10V SBY/ K DP133 (N/5)* (V)	10.6	11.2	11.2	10.2	10.4	9.3
Vcc1 / 44-IV001 (J/7)* (V)	7.8	7.9	7.9	7.9	7.9	7.8
UVFB / K DL043 (K/8)* (V)	13.3	14.5	14.5	12.7	12.8	11.1
13V / CL042 (J/8)* (V)	0	0	0	0	0	0
200V / CL046 (P/6)* (V)	0	0	0	0	0	1.1
5V / CP143 (H/3)* (V)	0	0	0	0	0	0.2

(*) Components location

safety circuit block diagram only

ALLGEMEINE INFORMATIONEN

VORGEHENSWEISE

1 - BEIM EINSCHALTEN

Beobachten Sie das Verhalten der 2-farbigen LED: Merken Sie sich das Einschalt- verhalten und vergleichen es mit den normalen Zyklen.
Hierdurch kann die Zeit bis der Fehlerzeitpunkt und die zu überprüfende Stufe festgestellt werden.

2 - TROUBLE SHOOTING ABLAUF: LED-VERHALTEN

In bestimmten Fällen leuchtet die LED zum Übertragen einer Fehlerinformation auf:
LED Aufleuchten: Übertragung der Fehlerinformation
Zählen der Fehlerinformation: Kodiert in zwei Impulsbündeln, unterbrochen durch 0,7 s Pause.
Dieses wiederholt sich mehrere Male.

Sehen Sie in der Fehlercodetabelle

Diese Informationen sind genauer als Farbänderungen aber unvollständig, da verschiedene Ursachen denselben Code verursachen.

HINWEIS:
Im Service Mode ist es möglich die letzten Fehler-Codes aufzurufen, die sich in dem Fernsehgerät ereignet haben.

3 - FEHLERSUCHE

Funktionen der Stufen 1 und 2: Messungen mit dem Oszilloskop sind für die beiden separaten Vorgänge durchzuführen.

a - Das Gerät arbeitet ganz oder teilweise:
- Benutzen Sie die LED Informationen der Fehlersuchmethode 1 und 2.
Schauen Sie ebenfalls bei Fehlersuche nach Symptomen nach.

b - Das Fernsehgerät schaltet permanent oder periodisch ab:
- Beobachten Sie das LED-Verhalten (rotes Aufleuchten, konstantes orange gefolgt von Aufleuchten, usw.)
Wählen Sie das zutreffende Kästchen in der Spalte: Fehlersuche durch LED-Verhalten.

INFORMATIONEN

Fernsehgeräte mit dem Chassis ICC19 arbeiten teilweise auch ohne die Module DVT, Sound, CRT, Chroma (50Hz) und VM Video (100Hz).

Dieser Punkt kann hilfreich sein wenn das Videomodul das Gerät in den Schutz-Mode schaltet.

Sehen Sie in die Geräte Konfigurationstabelle

BEHAVIOUR OF ICC19 WITHOUT CERTAIN MODULES ARE FITTED OR REMOVED

CONFIGURATION				ERROR CODE	ALL VOLTAGES	Signal at pin 19 BV011	Signal at pin 2-4-6 BV001	picture
VM	AM-FM	DVT	CRT					
without	without	without	without (1)	17	ok (1)	no	no	no
with	without	without	without (1)	17	ok (1)	no	no	no
with	with	without	without (1)	39	ok (1)	no	no	no
with	with	with	without (1)	26	ok (1)	ok	no	no
with	without	with	with	17	ok	ok	ok	ok
with	with	without	with	39	ok	ok	ok	ok (2)
without	with	with	with	15	ok	noise	pulse 100Hz	no

(1) : If the CRT is not connected, the voltage across CL046 will increase up to 250V instead 202V, this is due to the lack of a discharge path. Before to reconnecting BL050 and BP110 it is **imperative to discharge** CL046 with a resitor (22k or 33k).

(2) : In this case, the picture will only be visible after 1mn.

VERHALTEN DES CHASSIS ICC19 MIT EINZELNEN GEZOGENEN MODULEN ODER KOMPLETT OHNE MODULE

KONFIGURATION				FEHLER CODE	ALLE SPANNUNGEN	Signal an Pin 19 BV011	Signal an Pin 2-4-6 BV001	Bild
VM	AM-FM	DVT	CRT					
ohne	ohne	ohne	ohne (1)	17	ok (1)	nein	nein	nein
mit	mit	ohne	ohne (1)	17	ok (1)	nein	nein	nein
mit	mit	ohne	ohne(1)	39	ok (1)	nein	nein	nein
mit	mit	mit	ohne (1)	26	ok (1)	ok	nein	nein
mit	ohne	mit	mit	17	ok	ok	ok	ok
mit	mit	ohne	mit	39	ok	ok	ok	ok (2)
ohne	mit	mit	mit	15	ok	Rauschen	Frequenz.100Hz	nein

(1) : Wenn das CRT Modul nicht angeschlossen ist, erhöht sich die Spannung an CL046 auf über 250V anstatt 202V. Der Kondensator wird nicht entladen. Bevor Sie BL050 und BP110 wieder anschließen, muß CL046 unbedingt mit einem Widerstand (22k oder 33k) entladen werden.
(2) : In diesem Fall wird das Bild nach 1 Min sichtbar.

ICC19 100 Hz - BASIC- / IM- / MM- SCENIUM Version

tube name	description	CT-Part		DST	Usys jumper	Usys	Version
A66EGW 48X322	4/3 28"MP INVAR BSVM	CT 19101 34	10362880	10460360	JP915	134V	ICC19 IM
		CT 19105 37	10351530	10468070	JP914	137V	ICC19 IM
A59EGD048X322	4/3 25"SF INVAR BSVM	CT 19105 37	10351530	10468070	JP914	137V	ICC19 IM
A68EGD038X322	4/3 29"SF INVAR BSVM	CT 19105 37	10351530	10468070	JP914	137V	ICC19 IM
		CT 19152 37	10520610	10510870	JP914	137V	ICC19 MM
A66EHJ 48X 12	4/3 28"MP AK; no BSVM	CT 19103 34	10556010	10551170	JP915	134V	ICC19 BASIC
A68EGV038X322	4/3 29"SF SS INVAR BSVM	CT 19155 37	10562010	10551150	JP914	137V	ICC19 IM/MM
A80AJA 16X120	4/3 33"MP INVAR BSVM	CT 19156 37	10561990	10510870	JP914	137V	ICC19 IM
A80EJA 16X122	4/3 33"MP INVAR BSVM	CT 19156 37	10561990	10510870	JP914	137V	ICC19 IM
A90AFX 16X120	4/3 37"MP INVAR BSVM	CT 19156 37	10561990	10510870	JP914	137V	ICC19 IM
W66EGV023X122	16/9 28"SF INVAR BSVM	CT 19111 34	10444810	10468160	JP915	134V	ICC19 IM
W76EGV023X122	16/9 32"SF INVAR BSVM	CT 19111 34	10444810	10468160	JP915	134V	ICC19 IM
W76EGX023X122	16/9 32"SF INVAR BSVM	CT 19151 34	10520600	10520330	JP915	134V	ICC19 MM
W66EGV023X122	16/9 28"SF INVAR BSVM	CT 19251 40	10578550	10576740	JP917	140V	ICC19 MM + IM + PVM (PANORAMA)
W76EGX023X122	16/9 32"SF INVAR BSVM	CT 19251 40	10578550	10576740	JP917	140V	
W76EGV023X122	16/9 32"SF INVAR BSVM	CT 19251 40	10578550	10576740	JP917	140V	
W76EGV023X878	16/9 32"SF INVAR BSVM	CT 19251 40	10578550	10576740	JP917	140V	
W66LPQ356X99	16/9 28"SF INVAR BSVM	CT 19551 40	10604230	10647440	JP917	140V	SCENIUM XF TUBE
W76LPF350X97	16/9 32"SF INVAR BSVM	CT 19551 40	10604230	10647440	JP917	140V	

RP C19

tube name	description	CT-Part		DST	Usys jumper	Usys	Version
RP - 4/3	4/3 46" - 52"	CT 19400 34	10530110	10521310	JP915	134V	RP C19 4/3
RP - 16/9	16/9 52"	CT 19450 34	10615440	10641600	JP915	134V	RP C19 16/9

ICC19 50 Hz

tube name	description	CT-Part		DST	Usys jumper	Usys	Version
A59EGD048X300	4/3 25"SF	CT 19005 31	10510890	10517720	JP915	131V	
A66ECY13X15	4/3 28"MP	CT 19003 32	10351520	10517740	JP914	132V	
A66EHJ 13X 15	4/3 28"MP AK	CT 19003 32	10351520	10517740	JP914	132V	
A68EGD038X300	4/3 29"SF	CT 19005 31	10510890	10517720	JP915	131V	
A80AEJ15X01	4/3 33"MP	CT19006 31	10351840	10517720	JP915	131V	
W66EGV023X115	16/9 28"SF	CT 19032 37	10391010	10517750	JP917	137V	
W76EGX023X115	16/9 32"SF	CT 19032 37	10391010	10517750	JP917	137V	

b16WÄü

U SYS . / REFERENCE TUBE

CONTROLES DES CIRCUITS DE DEVIATION LIGNE

CONTROLES DES CIRCUITS DE DEVIATION TRAME

ICC19 100 Hz - BASIC- / IM- / MM- SCENIUM Version

tube name	description	CT-Part		DST	Usys jumper	Usys	Version
A66EGW 48X322	4/3 28"MP INVAR BSVM	CT 19101 34	10362880	10460360	JP915	134V	ICC19 IM
		CT 19105 37	10351530	10468070	JP914	137V	ICC19 IM
A59EGD048X322	4/3 25"SF INVAR BSVM	CT 19105 37	10351530	10468070	JP914	137V	ICC19 IM
A68EGD038X322	4/3 29"SF INVAR BSVM	CT 19105 37	10351530	10468070	JP914	137V	ICC19 IM
		CT 19152 37	10520610	10510870	JP914	137V	ICC19 MM
A66EHJ 48X 12	4/3 28"MP AK; no BSVM	CT 19103 34	10556010	10551170	JP915	134V	ICC19 BASIC
A68EGV038X322	4/3 29"SF SS INVAR BSVM	CT 19155 37	10562010	10551150	JP914	137V	ICC19 IM/MM
A80AJA 16X120	4/3 33"MP INVAR BSVM	CT 19156 37	10561990	10510870	JP914	137V	ICC19 IM
A80EJA 16X122	4/3 33"MP INVAR BSVM	CT 19156 37	10561990	10510870	JP914	137V	ICC19 IM
A90AFX 16X120	4/3 37"MP INVAR BSVM	CT 19156 37	10561990	10510870	JP914	137V	ICC19 IM
W66EGV023X122	16/9 28"SF INVAR BSVM	CT 19111 34	10444810	10468160	JP915	134V	ICC19 IM
W76EGV023X122	16/9 32"SF INVAR BSVM	CT 19111 34	10444810	10468160	JP915	134V	ICC19 IM
W76EGX023X122	16/9 32"SF INVAR BSVM	CT 19151 34	10520600	10520330	JP915	134V	ICC19 MM
W66EGV023X122	16/9 28"SF INVAR BSVM	CT 19251 40	10578550	10576740	JP917	140V	ICC19 MM + IM + PVM (PANORAMA)
W76EGX023X122	16/9 32"SF INVAR BSVM	CT 19251 40	10578550	10576740	JP917	140V	
W76EGV023X122	16/9 32"SF INVAR BSVM	CT 19251 40	10578550	10576740	JP917	140V	
W76EGV023X878	16/9 32"SF INVAR BSVM	CT 19251 40	10578550	10576740	JP917	140V	
W66LPQ356X99	16/9 28"SF INVAR BSVM	CT 19551 40	10604230	10647440	JP917	140V	SCENIUM XF TUBE
W76LPF350X97	16/9 32"SF INVAR BSVM	CT 19551 40	10604230	10647440	JP917	140V	

RP C19

tube name	description	CT-Part		DST	Usys jumper	Usys	Version
RP - 4/3	4/3 46" - 52"	CT 19400 34	10530110	10521310	JP915	134V	RP C19 4/3
RP - 16/9	16/9 52"	CT 19450 34	10615440	10641600	JP915	134V	RP C19 16/9

ICC19 50 Hz

tube name	description	CT-Part		DST	Usys jumper	Usys	Version
A59EGD048X300	4/3 25"SF	CT 19005 31	10510890	10517720	JP915	131V	
A66ECY13X15	4/3 28"MP	CT 19003 32	10351520	10517740	JP914	132V	
A66EHJ 13X 15	4/3 28"MP AK	CT 19003 32	10351520	10517740	JP914	132V	
A68EGD038X300	4/3 29"SF	CT 19005 31	10510890	10517720	JP915	131V	
A80AEJ15X01	4/3 33"MP	CT19006 31	10351840	10517720	JP915	131V	
W66EGV023X115	16/9 28"SF	CT 19032 37	10391010	10517750	JP917	137V	
W76EGX023X115	16/9 32"SF	CT 19032 37	10391010	10517750	JP917	137V	

GENERAL INFORMATION

METHODOLOGY

1 - SWITCHING "ON" THE TV :

- Observe the behaviour of the two-coloured LED: note the various stages and compare them with the normal cycle of events.
By watching this, the point at which the problem arises and the part of the circuit which needs to be investigated can be identified.

2 -TROUBLE SHOOTING PROCEDURE: LED BEHAVIOUR

In certain cases a flashing LED signifies the transmission of an error code message:

LED flashes : message transmission.

Count the flashes : coded into two bursts separated by a pause of 0.7 s and repeated several times.

See the error code table.

This data is more precise than LED colour changes, however, since various fault conditions generate the same error code the information signalled may be imcomplete.

Please Note :
In the service mode, it is possible to consult a record of the last error codes which have occurred in the television set.

3 - FAULT FINDING :

Operation stages 1 and 2: an oscilloscope test is carried out according to two separate processes.

a - The television set operates fully or partially
- Use LED message observation fault finding methods 1 and 2. See also the fault related to fault finding by symptom.

b - The television set goes into permanent or cyclical security mode
- Observe LED behaviour (flashing red, stable orange followed by flashing, etc.).
Select the relevant box in the column (LED behaviour fault finding).

INFORMATION

The ICC19 television will partially operate without the DVT, SOUND, CRT, CHROMA (50 Hz) and VM video (100 Hz) modules remoded.
This point may be useful if the video module causes the TV to switch to security mode.

See the television configuration table.

BEHAVIOUR OF ICC19 WITHOUT CERTAIN MODULES ARE FITTED OR REMOVED

CONFIGURATION				ERROR CODE	ALL VOLTAGES	Signal at pin 19 BV011	Signal at pin 2-4-6 BV001	picture
VM	AM-FM	DVT	CRT					
without	without	without	without (1)	17	ok (1)	no	no	no
with	without	without	without (1)	17	ok (1)	no	no	no
with	with	without	without (1)	39	ok (1)	no	no	no
with	with	with	without (1)	26	ok (1)	ok	no	no
with	without	with	with	17	ok	ok	ok	ok
with	with	without	with	39	ok	ok	ok	ok (2)
without	with	with	with	15	ok	noise	pulse 100Hz	no

(1) : If the CRT is not connected, the voltage across CL046 will increase up to 250V instead 202V, this is due to the lack of a discharge path. Before to reconnecting BL050 and BP110 it is **imperative to discharge** CL046 with a resitor (22k or 33k).

(2) : In this case, the picture will only be visible after 1mn.

SERVICE TIPS

ICC19 16/9 50 Hz CHASSIS
32WS88KE - 28WS78KE - 32WS83KP - 28WS73KD

- ANSPRECHEN DER SCHUTZSCHALTUNG UND ABSCHALTEN DES NETZTEILS BEI VIDEOBETRIEB

Ursache :
Ansprechen der Synchronisationssignal während ein oder zwei Bilder (schlechte Qualität der Videocassette).

Abhilfe :
- Ersetzen sie den Kondensator CL067 100nF 100V durch einen 1µF 63V Bestell-Nr.: 43067772.
- Ergänzen Sie den Melf Widerstand RL066 220kΩ 5% 100mW, Bestell-Nr.: 10328700.

FERNSEHGERÄTE MIT DEM CHASSIS ICC19 (50Hz, 100Hz)

* PERMANENTE STÖRGERÄUSCHE AUS DEN LAUTSPRECHERN IM STAND-BY MODE
- CP120 von 470µF/35V gegen 330µF/25V austauschen (Bestell-Nr. 10448410).

* AUSFALL DES IC TDA8177F IN POSITION IF001

ACHTUNG

Es ist unbedingt darauf zu achten für das Chassis ICC19 das IC TDA8177F (Bestell-Nr. 10352880) zu verwenden. Dieses IC für höhere Lastströme ausgelegt als das IC TDA8177 (Bestell-Nr 15053440). Dieses IC wird in Geräten mit dem Chassis TX92 verwendet.
Im Falle einer Verwechselung fällt das IC nach dem Einschalten aus.

FERNSEHGERÄTE MIT DEM CHASSIS ICC19 100 Hz (STEREO ODER DOLBY STEREO)

- MOIRE ODER SCHWARZE VERTIKALE BALKEN AUF DEM BILDSCHIRM VHF BAND I (NUR ITALIAN)

Ursache :
Übersprechen zwischen Netzteil und Tuner.

Abhilfe :
- Ersetzen Sie den Switch Mode Trafo LP020 durch eine neunen mit der TOCOM-Nr :
- 10553820 (Stereo)
- 10553830 (Dolby stereo).

BETROFFENE GERÄTE/CHASSIS: ICC19 (100HZ)
28WS78M, 28WS78MP, 32WS88ME, 32WS98MP
(nur Geräte mit Serien-Nr. beginnend mit AK3025110)

Symptom/Problem:

- ABHÄNGIG VON DER AUSRICHTUNG DES GERÄTES IM ERDMAGNETFELD IST EINE ROTATION DES BILDES MÖGLICH.
DER EFFEKT IST BEI VIDEOTEXT ODER EINGEBLENDETEN UNTERTITELN BESON DERS SICHTBAR.

Abhilfe:
Abgleich der Erdfeldkorrektur. Der Einsteller (Poti) befindet sich auf der Erdfeldkorrekturplatine (EFC).
Sollte keine Erdfeldkorrekturplatine eingebaut sein, kann diese nachgerüstet werden (Best-Nr. 350 592 70).

CRT BS 19200 - CRT BS 19201

COMPONENT SIDE - CÔTE COMPOSANTS - BESTÜCKUNGSSEITE - LATO COMPONENTI - LADO COMPONENTES

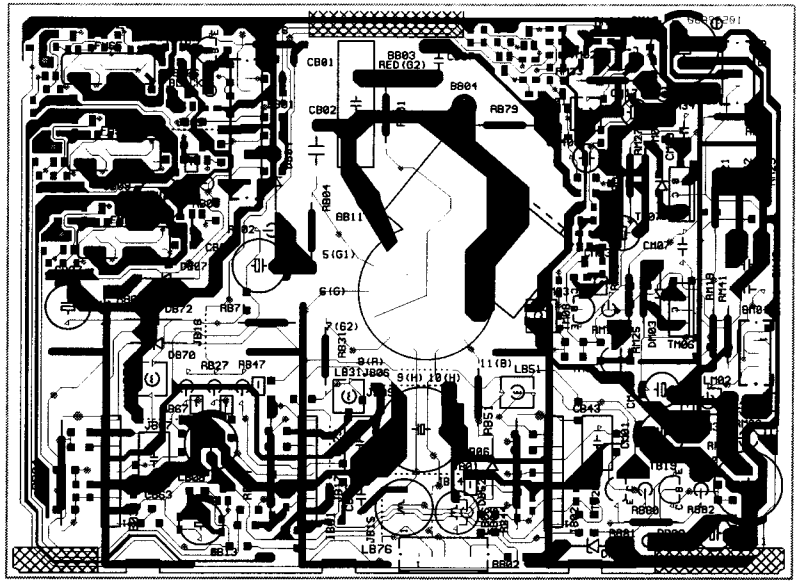

SOLDER SIDE - CÔTE SOUDURES - LÖTSEITE - LATO SALDATURE - LADO SOLDADURAS

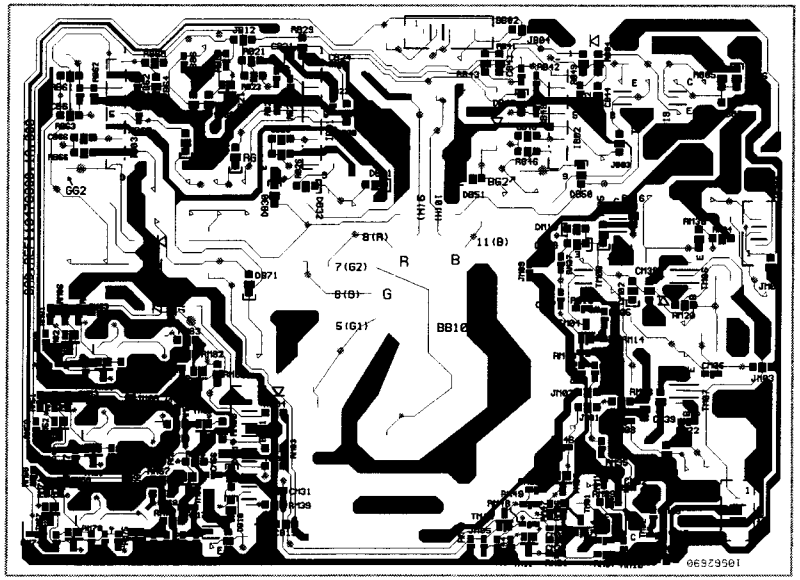

CRT BS 19100 - CRT BS 19400

COMPONENT SIDE - CÔTE COMPOSANTS - BESTÜCKUNGSSEITE - LATO COMPONENTI - LADO COMPONENTES

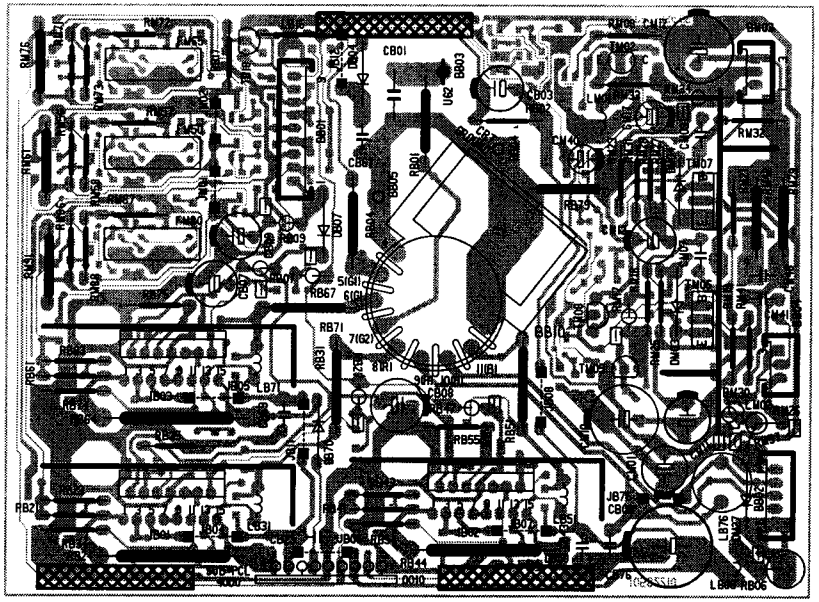

SOLDER SIDE - CÔTE SOUDURES - LÖTSEITE - LATO SALDATURE - LADO SOLDADURAS

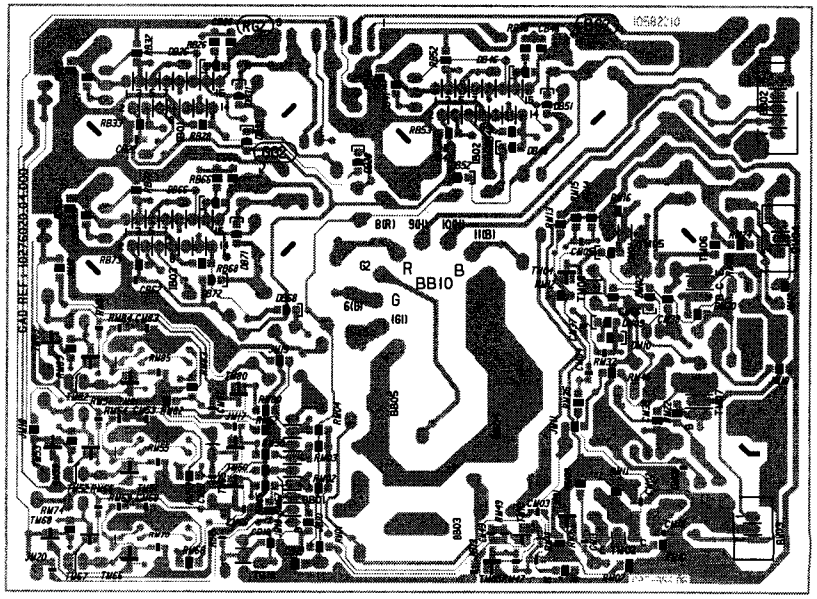

CRT BS 19100 - CRT BS 19400

COMPONENT SIDE - CÔTE COMPOSANTS - BESTÜCKUNGSSEITE - LATO COMPONENTI - LADO COMPONENTES

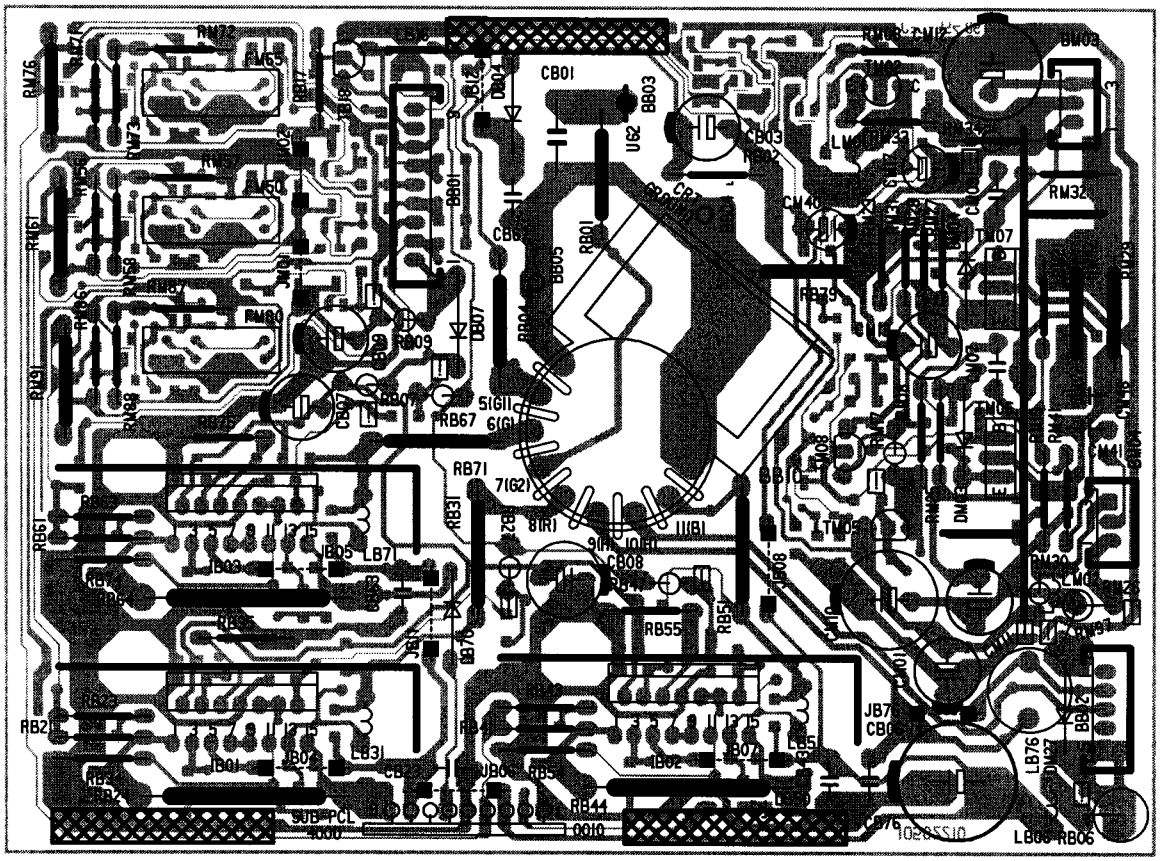

SOLDER SIDE - CÔTE SOUDURES - LÖTSEITE - LATO SALDATURE - LADO SOLDADURAS

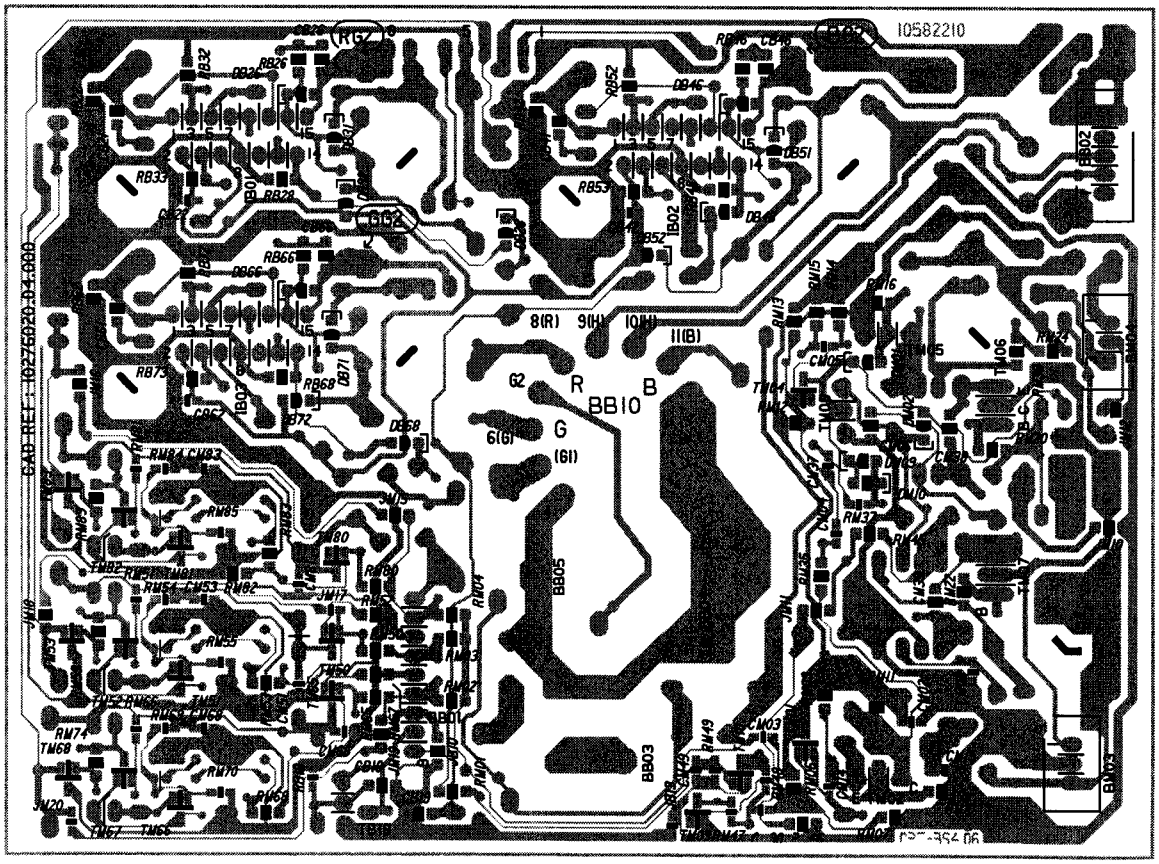

CRT BS 19200 - CRT BS 19201

COMPONENT SIDE - CÔTE COMPOSANTS - BESTÜCKUNGSSEITE - LATO COMPONENTI - LADO COMPONENTES

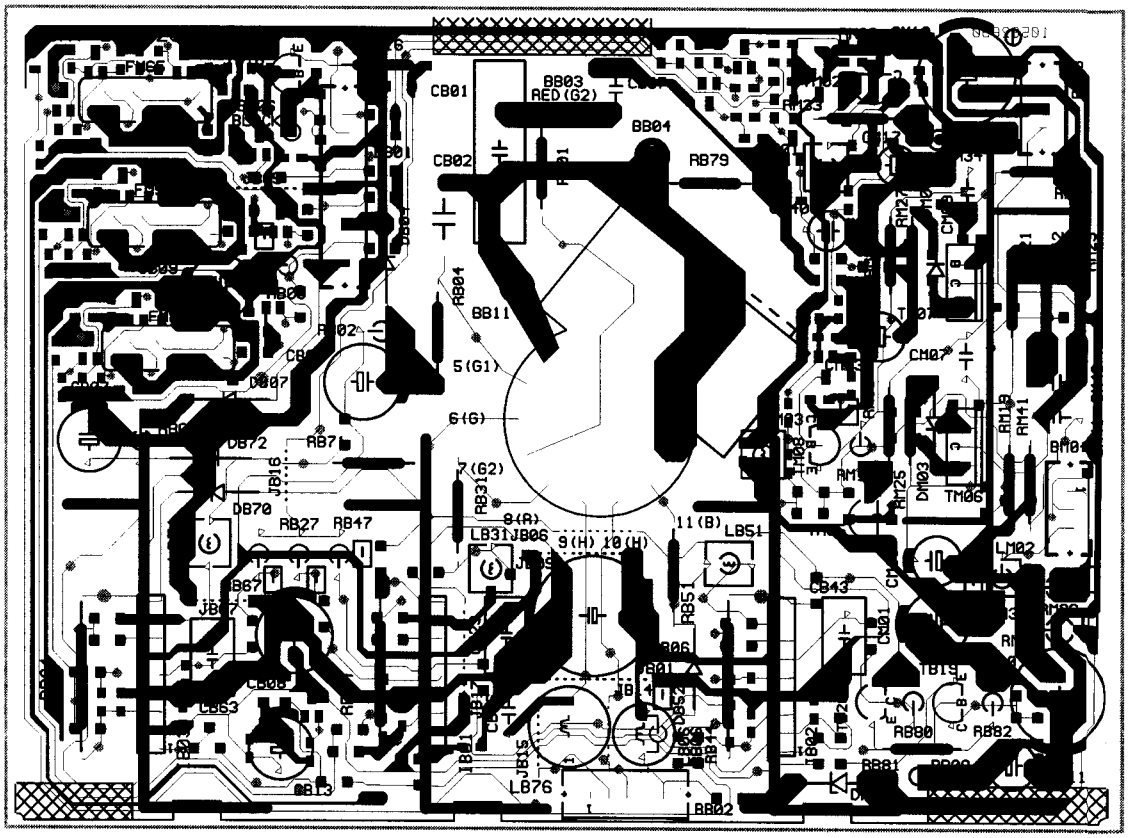

SOLDER SIDE - CÔTE SOUDURES - LÖTSEITE - LATO SALDATURE - LADO SOLDADURAS

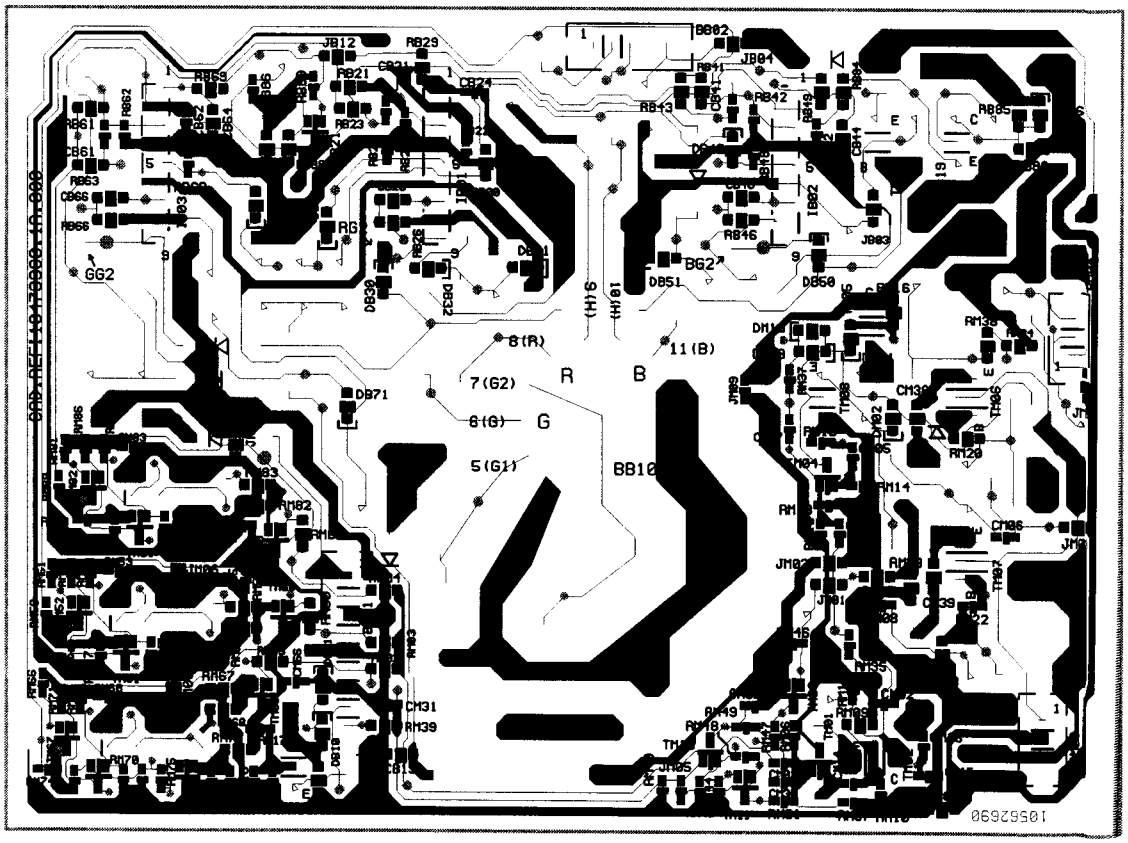

ICC19 100 Hz
First issue 09 / 97

Updated 11/ 9 9

VIDEO AMPLIFIER BOARD - PLATINE AMPLIFICATEURS VIDEO - VIDEOVERSTÄRKERPLATTE - PIASTRA AMPLIFICATORE VIDEO - PLATINA AMPLIFICADOR VIDEO

CRT BS19100

COMPONENT SIDE - CÔTE COMPOSANTS - BESTÜCKUNGSSEITE - LATO COMPONENTI - LADO COMPONENTES

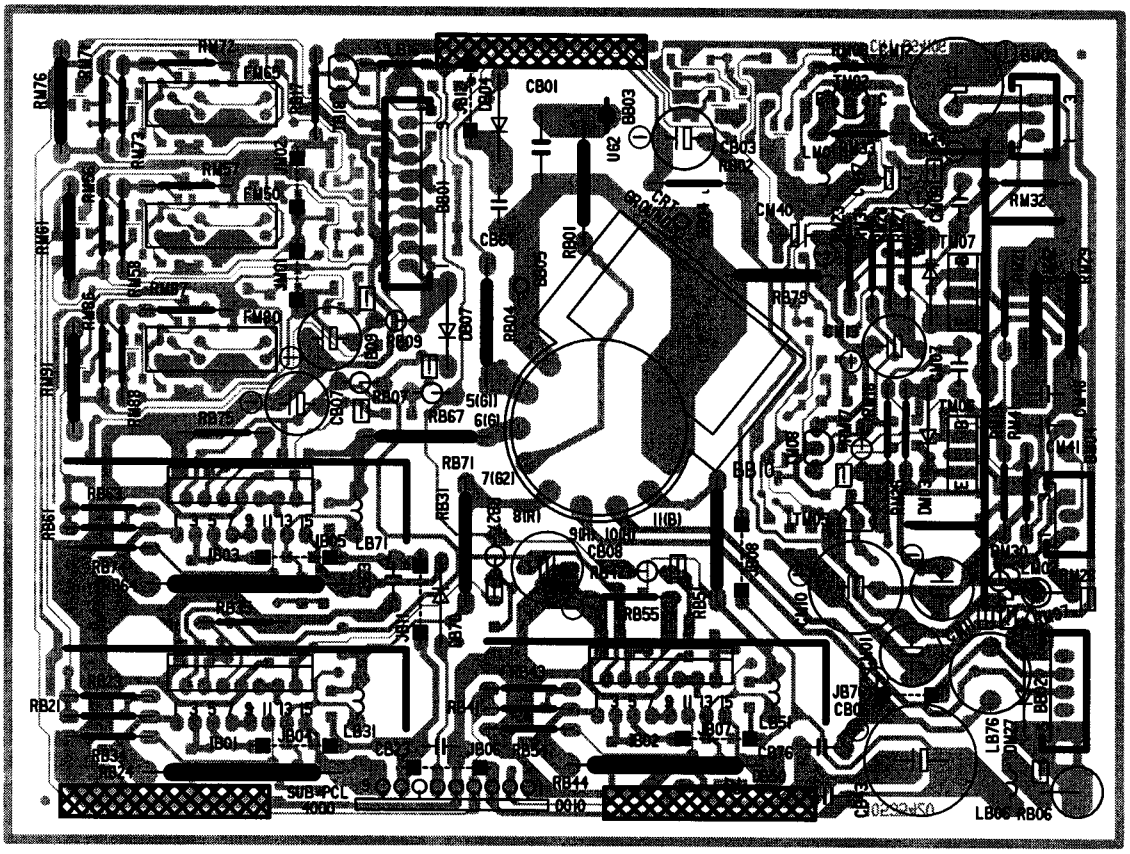

SOLDER SIDE - CÔTE SOUDURES - LÖTSEITE - LATO SALDATURE - LADO SOLDADURAS

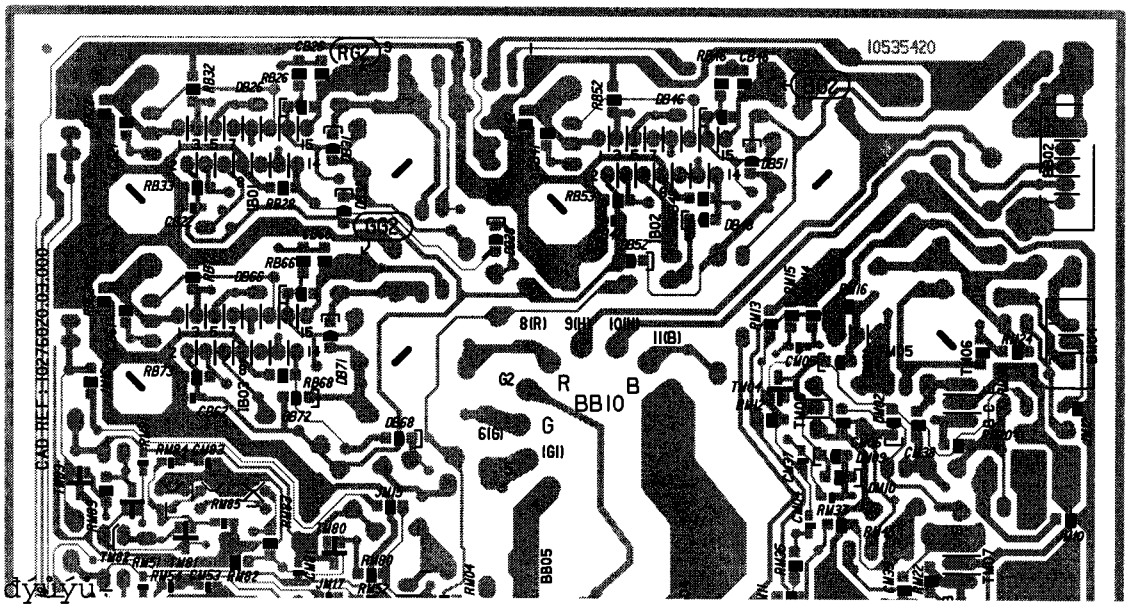

dyayu

LIST OF ABBREVIATIONS - LISTE DES ABREVIATIONS - ABKÜRZUNGEN LISTA DELLE ABBREVIAZIONI - LISTA DE ABREVIACIONES

- **AV_R_ OUT** Audio Right-Out
- **AV_I_ OUT** Audio Left-Out
- **AV_R_ IN** Audio Right-In
- **AV_L_ IN** Audio Left-In
- **AV_C_ IN** Chroma-In
- **AV_Y_ IN** Video-In
- **AV_Y_ OUT** Video-Out
- **AV1_8** Pin-8 Detector
- **BEAM_INFO** BEAM CURRENT INFORMATION
- **BG INFO** SWITCH BG
- **B_AV** B SIGNAL FROM AV
- **B_TXT** B SIGNAL FROM TEXTMODULE
- **CRT_B** B SIGNAL TO VIDEO AMPLIFIER
- **CRT_G** G SIGNAL TO VIDEO AMPLIFIER
- **CRT_R** R SIGNAL TO VIDEO AMPLIFIER
- **CVBS_SAT** SAT_VIDEO
- **DEGAUSS** DEGAUSS SIGNAL
- **E.W_DRIVE** EAST - WEST DRIVE SIGNAL
- **EW_BACK** FEED BACK INFORMATION
- **FB_AV** FAST BLANK SIGNAL FROM AV SCART
- **FB DETEC** FAST BLANKING DETECT
- **FB_TXT** FAST BLANK SIGNAL FROM TEXTMODUL
- **FRAME _DR** DRIVE SIGNAL FOR VERTICAL DEFLECTION
- **G_AV** G SIGNAL FROM AV
- **G_TXT** G SIGNAL FROM TEXTMODULE
- **HDFL** HORIZONTAL SYNC.
- **HDRV** DRIVE SIGNAL FOR HORIZONTAL DEFLECTION
- **HTR1 / HTR2** HEATER OUTPUT FROM THE DST TO CRT
- **I CUT** CUT OFF CURRENT
- **IIC-CL-1** I2C CLOCK BUS 1
- **IIC-CL-2** I2C CLOCK BUS 2
- **IIC-DA-1** I2C DATA BUS 1
- **IIC-DA-2** I2C DATA BUS 2
- **IR** INFRARED
- **L1_INFO** STANDARD L BAND 1
- **LDFL** LINE LOCKED CLOCK 27 MHz
- **LDR** LED DISPLAY
- **MAIN _Y** Y FROM CHROMA DECODER
- **MAIN _U** U FROM CHROMA DECODER
- **MAIN _V** V FROM CHROMA DECODER
- **M-RES** MASTER RESET TO MICROPROCESSOR
- **MUTE** MUTES AMPLFIERS
- **NMI** NON MASKABLE INTERRUPT (alternate function of Pin 55 STR092)
- **NORM** SWITCH POLARITY OF THE VIDEO SIGNAL TUNER
- **PLL-ON** ENABLE DEFLECTION PLL
- **PKS** SIGNAL FOR ABL CIRCUIT (STV2161/STV2162)
- **R_AV** R SIGNAL FROM AV
- **R_TXT** R SIGNAL FROM TEXTMODULE
- **SAFE** SAFETY INFORMATION FROM DEFLECTION
- **SMPS_IN** FEED BACK SIGNAL FOR POWER SUPPLY REGULATION (STV2161/2)
- **SSC** SUPER SAND CASTEL CIRCUIT
- **TEMP_ABL** SIGNAL DST-TEMPERATURE SENSING CIRCUIT
- **T1_CVBS** COMPOSITE VIDEO BASEBAND FROM TUNER
- **U_SCART** SCART VOLTAGE
- **+USYS** SYSTEM VOLTAGE
- **+/- US** SOUND VOLTAGE
- **+UVERT** VERTICAL VOLTAGE
- **+UVFB** VERTICAL RETRACE VOLTAGE
- **+UVIDEO** VIDEO VOLTAGE FOR THE CRT BOARD
- **VA** VERTICAL REFERENCE OUT FROM TDA 9143
- **VDFL** VERTICAL SYNC.
- **V-SYNC** VERTICAL SYNC.FOR TELETEXT MODULE
- **5 V** 5V POWER SUPPLY
- **13 V** 12V POWER SUPPLY
- **5 VSTBY** 5V STAND BY
- **10 VSTBY** 10V STAND BY

THOMSON MULTI MEDIA

TV

Brandt **FERGUSON** **SABA** **TELEFUNKEN** **THOMSON**

PARTS LIST
LISTE PIECES DETACHEES
ERSATZTEILLISTE
LISTA PARTI DI RICAMBIO
LISTA DE PIEZAS DE REPUESTO

THOMSON
52RW64E
Chassis ICC19

MODULES

MAIN	**IC19M5MA08P004**		
ABL	**ABLRP19**	**R**	**10637710**
AMVD	**AM/VD19000**	**R**	**10546730**
AMVD	**SUBAMVD19100**		**10546720**
CRT	**CRTRP19 R**	**R**	**10284380**
CRT	**CRTRP19 G**	**R**	**10546590**
CRT	**CRTRP19 B**	**R**	**10529410**
DCU	**DCURP19**	**R**	**10468670**
DVT	**DVT19010**	**R**	**10510420**
EMB	**EMB19500**	**R**	**10600840**
FCB	**FCB1907**	**R**	**25312710**
KDB	**KDB1909**	**R**	**25382560**
LDN	**LDN1907**		**25421050**
PS	**PSRP19**	**R**	**10527240**
RGB	**SUB RGB-PIRP19**	**R**	**10644830**
RIR	**IR1902**	**R**	**25421170**
SCI	**SCI19004**	**R**	**10581460**
VM	**VM19400**	**R**	**10609390**

GR001	TSOP1333	25358570
IA001	TDA7269	10348790
IA002	TDA7298	10348810
IA010,**IB**012, **IG**011,**IL**062	TL082CD FLAT	10364130
IF001	TDA8177F	10352880
II050	TDA9811/V3	10336130
IK001	STV2040	10379540
IK002,003, **IP**002	TL084/CP	46021200
IK004,**IP**130	MC7812/CT	46007600
IK005	MC7805/CT	46025200
IK006	L7912CV	15054150
IK007	M24C32BN1	10462210
IK008,015	X24164	10068250
IP050,**IX**001	MC7809/CT	70401402
IP060	TEA2261	90542470
IP140	TDA8139	10044580
IP250	K324PG(CNY75GA) ⚠	10536210
IR001	ST90R92	10441970
IR002	IC-ROM THOMSON V6.02-1	1061194A
IR003	M24C64-BN1	10533930
IR004	MC14094BD/HEF4094BT/ BU4094BF FLAT	20016020
IR020	C19 M27C160-120F1 V6.01-1	10652940
IR030	GM76G256AL-FW70 FLAT	10271860
IR040	74F02 FLAT	10529250
IS001,060	MC4558CD IC SMD	10276220
IS010	MC78L08ACP	10308410
IS100	MSP8410D-B4 (DIE)	10546420
IS200	DPL3519 (DIE)	10546430
IT001	SDA5275-2S	10449670
IT002	HYB514400BJ-80	10359750
IV001[a]	STV2162 CUT2.2	10529490
IV001[c]	STV2165	10360480
IV300	TDA8755 FLAT	10147010
IV301,302	MSM5412222-25-TS-K FLAT	10389960
IV303	MCU-1 PLUS FLAT	10598370
IV305,308,311	HEF4046BT FLAT	10261110
IV306	LM358D FLAT	10258670
IV312	TS462 FLAT	10606770
IV601	TDA9143N3	10591540
IV602	TDA4665T FLAT	10155740
IV780	HEF4053BT/BU4053BF/ UPD4053BG FLAT	20230300
IX900	TEA6415C	15081290
ZL041	MP160 ⚠	10457130
ZV301	MP50 ⚠	10457120

TA001[b],002[b], 052,054,**TB**001, 002,052,054, **TG**001,002,052, 054	BDW93CFI	10599300
TA001[a],**TI**030, **TP**150,166,190, **TV**001[c],051,053, 063,071,073, 083,382,393, 600,640,660, 680,681,775, 785,**TY**004	BC856B SMD	16006310
TA002[a],006,050, **TB**006,050, **TG**006,050, **TI**031,032,070, **TL**001,062,063, **TP**026,027,152, 161,162,167, 170,175,**TR**002, 102,105,**TV**052, 072,395,601, 603,604,641, 642,661,662, 682,**TX**955,960, 965,**TY**001,002, 003,005	BC846B SMD	16006260
TA003,004,053, 055,**TB**003,004, 053,055,**TG**003, 004,053	BDW94CFI	10599200
TA005,051, **TB**005,051, **TG**005,051, **TK**106,206,306, **TV**002[b]	BF420	16003080
TI010,033,034, 040,045,050, **TP**145,**TR**091, 095,106,**TT**004	BCR141 SMD	16006890
TI020,**TV**307	BF799 SMD	35031670

xxxx[a] : MAIN **xxxx[b] : DCU** **xxxx[c] : VM** **xxxx[d] : KDB**

R : RECYCLED PART
: PIECE RECYCLEE
: AUSTAUSCHTEILE
: RICAMBIO RICICLATO
: MODULO REPROCESADO

For any requests, please contact THOMSON multimedia after sales service area
Pour toutes précisions, contactez votre service apres vente local THOMSON multimedia
Für weitere Auskünfte, wenden Sie sich bitte an die THOMSON multimedia Kundendienste
Per precisazioni, contattare l'assistenza tecnica THOMSON multimedia
Para cualquier pregunta, por favor contactar con el responsable de zona del servicio postventa de THOMSON multimedia

09 / 99 **35094280**
REV. N°0 00 / 00 **00000000**

No copying, translation, modification on other use authorized. All rights reserved worldwide. • Tous droits de reproduction, de traduction, d'adaptation et d'exécution réservés pour tous les pays. • Sämtliche Urheberrechte an diesen Texten und Zeichnungen stehen uns zu. Nachdrucke, Vervielfältigungen - auch auszugsweise - nur mit unserer vorherigen Zustimmung zulässig. Alle Rechte vorbehalten. • I diritti di riproduzione, di traduzione, e esecuzione sono riservati per tutti i paesi. • Derechos de reproduccion, de traduccion, de adaptacion y de ejecucion reservados para todos los paises.

TK001,003,005, 009,027,101, 132,201,232, 301,332,**TS**001, 002,**TT**002,008, 009,010,**TV**006, 007,008,011, 019,020,**TX**620, 622,650,652	BC857B SMD	30946660
TK002,004,020, 022,023,024, 028,130,230, 330,**TM**104,109, 110,204,209, 210,304,309, 310,**TP**001, **TS**003,004, **TT**001,003,006, 007,011,012, **TV**001[b],003,004, 005,014,**TX**621, 651,830,831, 832,833	BC847B SMD	11070770
TK102,104,202, 204,302,304	BF883S	10162190
TK103,105,203, 205,303,305	BF872	10162200
TK107,207,307, **TM**101,108,201, 208,301,308, **TP**270	BC557B	16001060
TL004	MPSW01A	70436520
TL005	MPS750	16001340
TL028	TIP122FP	25358380
TL030	ON4977/BU2525AX	10461310
TM006	2SA1837	16001500
TM007	2SC4793	16001600
TM102,202,302	BC337-40	45001466
TM105,205,305, **TP**238	BC547B	16000890
TP025	600V 1A25	10353960
TP060	BUL810TH	10224370
TP146	BD241C	16001880
TP220	2SK1460	15046790
TP222	BC327	16000430
TP223,224,271	BC547C	16000900
TR048	BCR185 SMD	16006900
TV002	TIP122	10045750
TV010	2SC3675	16004070
TV108	BC327-40	16000450
TV300	BCP69 SMD	35031480
TV303,381,392	BF660 SMD	16005830
TX505	BC848B SMD	35030590
TX910,920,950, **TZ**050,051	BC546B	45001866

DA001[b],002[b], 003,010,011, 050,051,052,059, 060,**DB**001,002, 003,010,011, 050,051,052, 059,060,**DF**001, **DG**001,002,003, 010,011,050, 051,052,060, **DK**001[d],002[d],003, 004,013,**DL**092, **DP**027,061,218, 219,223,224, 226,227,231, 232,237,238, 239,268,**DR**091, **DS**001,002,003, **DV**002,003,004, 007,008,009, 010,011,014, 015,020,027, 028,029,**DZ**050	1N4148	44009209
DA001[a],**DF**002, 028,**DK**005,006, 007,008,102, 106,107,201, 202,206,207, 302,306,307, **DL**070,072, **DM**101,102,105, 106,107,201, 202,205,206, 207,301,302, 305.306.307, **DP**051,060,151, 152,160,175, 178,179,190, **DR**030,031,090, **DT**001,002,003, 004,005,006, 007,008,009, 010,**DV**025,026, 027,028,038, 039,**RV**052	LL4148 SMD	16012450
DA002[a],**DV**011, 012	LL42 SMD	16012530
DA005,006,053, 058,**DB**005,006, 053,058,**DF**031, 033,**DG**005,006, 053,**DK**001[b],002[b], 010,011,012, **DL**001,051,052, **DM**110,111,210, 211,310,311, **DP**050,**DV**005, 006,031,032, 033	RGP10G	10459090
DA008,009,056, 057,**DB**008,009, 056,057,**DG**008, 009,056,**DV**017	BZX55C6V2	20475410
DF007	ZMM15 SMD	16030060
DF011	BZW04-48	10351880
DH001	ZMM33	10376460
DI001,002,040, 041,051,070, 071	BA782S	20542050
DK009	MA2062-A 6V	20707320
DK103,104,113, 203,204,213, 303,304,313	EGP10G	10542140
DK105,205,305	1N4007GP	10455230
DK108,208,308	BZT03/D150	70402351

DL030	DTV32F-1500	10452490
DL032	BYR29F-600	10569340
DL034,036	EGP10D	20953640
DL041,**DP**140	BYW29-150	16009140
DL043	RGP10M	10455320
DL046	RGP15-20	10340890
DL050	BZX85C22	11072690
DL057,**DS**061, 062,**DV**104,108, **DX**120,151,220, 251,301,351	BAV103 SMD	10155030
DL060	ZMM3,3	16030170
DL066	BZX55B47	11073450
DL071	BZX55C20	30948810
DP022,113	FUF4005/MUR160	16009580
DP039,040	RGP02-20	10472330
DP041	BAT42	16007410
DP052,133,134	1N4001	16008160
DP053,261,263	RGP15G	10272800
DP108,109	RGP30D	10455370
DP110A,110B	RGP50M	10298160
DP112	MUR1100E	10360280
DP130	MUR420	16009630
DP201	GBU4M	10474680
DP213	BZX55C33	11073690
DP225	ZPD4,7/BZX55C4V7	20475400
DP233,234,236, 240,243	BA159	16008120
DP235	BZX55C18	11073680
DP265,267	S410D	10527250
DR104	BZX55B9V1	70438220
DV018,019	BYD43-20	10301970
DV101	ZMM6,8 SMD	70439940
DV303,305,307	BB729S SMD	20542090
DV623	BZX84C5V1 SMD	16030330
DX810	BZX55B8V2	40441820
DX814	BZX55B5V1/ZPD5V1 2%	44035702
GE001	TLUV5300 LED	11137650

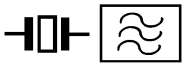

FI010	OFWK3954M FOS	10357610
FI015	OFWG3970M FOS	10512420
FI020	OFWK9453M FOS	10176450
FV001	12M0HZ	10539340
FV640,660		10295430
FV680		10295420
QI053	6M0HZ	48042300
QI070	6M5HZ	20356510
QR001	27M0HZ	10254120
QS040	18M432HZ	10334670
QT001	20M48HZ	10495020
QV601	4M433619HZ	10087710
QV602	3M579545HZ	10087720

FI001	40M4HZ	20300950
FI002	38M9HZ	10319260
FI030	77M8HZ	10348570
FI040	6M6HZ	10437980
FK130,230,330	100NS	10203890

LV326,380	7M96HZ		10519350
LV350	7M96HZ		10519370

PI030,035	2K2 OHM		10308240
PI050	22K0 OHM		10272680
PP267	100R0 OHM		10260330
PS001	1M0 OHM		42045200
PV003,004	1K OHM		42032100
PV101,201,301	2M2 OHM		10174000

RA001,**RB**001, **RG**001,**RK**057, **RP**003,004,007, 008,011,022	10K0 OHM 1% 0,40W		15010340
RA003,051, **RB**003,051, **RG**003,051	332R0 OHM 1% 0,40W		41289309
RA005,053, **RB**005,053, **RG**005,053	162R0 OHM 1% 0,40W		15011850
RA007,060, **RB**007,060, **RG**007,060	8K87 OHM 1% 0,40W		15021900
RA009,057, **RB**009,057, **RG**009,057	1R8 OHM 1% 1W		13085450
RA012,014,058, 059,**RB**012,014, 058,059,**RG**012, 014,058,059	0R47 OHM 10% 0,40W	⚠	15022650
RA013[b],055, **RB**013,055, **RG**013,055	267K0 OHM 1% 0,40W		15014920
RA013[a],014,030	4R7 OHM 5% 0,35W	⚠	10226310
RA020,064, **RB**020,064, **RG**020,064	2K43 OHM 1% 0,40W		15015580
RA061,**RB**061, **RG**061	8K25 OHM 1% 0,40W		15021840
RF011	1R5 OHM 5% 0,50W	⚠	15022560
RF012	1R82 OHM 1% 0,70W		10451420
RF013	1R21 OHM 1% 0,70W		13010820
RF015	15R0 OHM 265V PTC	⚠	10237730
RF020	270R0 OHM 1% 0,70W		10302230
RK061,065,067, 069	1K0 OHM 1% 0,40W		15012580
RK080	15K0 OHM 1% 0,40W		15011710
RK085	4K75 OHM 1% 0,40W		15018710
RK101,201,301, **RM**117,217,317, **RP**050,**RV**312, 327,393,601	10R0 OHM 5% 0,25W	⚠	15009580
RK104,204,304	47R0 OHM 5% 0,70W	⚠	10181910
RK107,207,307	392R0 OHM 1% 0,40W		15017110
RK112,212,312	2K2 OHM 5% 0,50W	⚠	10239310
RK114,116,118, 120,214,216, 218,220,314, 316,318,320	330R0 OHM 5% 0,50W	⚠	10239250
RK117,217,317, **RL**037	330R0 OHM 10% 0,50W		14050190
RK119,219,319	1K0 OHM 5% 0,50W	⚠	10239280
RK123,124,223, 224,323,324	1K5 OHM 5% 0,50W		10121880
RK129,229,329	6K81 OHM 1% 0,40W		15020590
RK228	47K5 OHM 1% 0,40W		13066180
RL013	4R7 OHM 5% 0,50W	⚠	15010040
RL015	1R0 OHM 5% 0,25W	⚠	15009730
RL029	2R2 OHM 5% 0,50W	⚠	10440420
RL040	0R27 OHM 5% 2,50W		10263600
RL043	2R2 OHM 5% 0,70W	⚠	13000480
RL052	54K9 OHM 1% 0,70W		10224320
RL081	68K1 OHM 1% 0,12W		10433880
RL082	59K0 OHM 1% 0,12W		10516830
RM101,201,301	220R0 OHM 5% 0,25W	⚠	15009810
RP001,023	182K0 OHM 1% 0,40W		15012250
RP009,010	3K32 1% 0,40W		41226709
RP012	39K2 OHM 1% 0,40W		15017130
RP015	8K66 OHM 1% 0,40W		15021880
RP016	8K06 OHM 1% 0,40W		15021810
RP017	7K5 OHM 1% 0,40W		15021220
RP018	5K36 OHM 1% 0,40W		15019620
RP020	0R12 OHM 5% 2,50W	⚠	10334390
RP021	10K2 OHM 1% 0,40W		15010370
RP022	100R0 OHM 5% 4,50W		10379830
RP027	15K4 OHM 1% 0,40W		15011730
RP030	100K OHM 1% 0,40W		15010170
RP031	13K0 OHM 1% 0,40W		15011210
RP032,035	22K1 OHM 1% 0,40W		41303301
RP056,057	1K3 OHM 1% 0,40W		15012810
RP066	3K65 OHM 1% 0,40W		13066710
RP100	10M0 OHM 5% 0,70W	⚠	10074320
RP207	2R7 OHM 5% 4,50W		10379110
RP220,**RV**001	4R7 OHM 5% 2,5W		10471330
RP244	7K15 OHM 1% 0,25W		15021170
RS042	4R7 OHM 5% 0,25W	⚠	35032200
RV069	150K0 OHM 1% 0,40W		41243301
RX503	15R0 OHM 5% 0,25W	⚠	15009630
RZ058	68K1 OHM 1% 0,40W		41307009
RZ059	18K2 OHM 1% 0,40W	R	15012330

CK103,105,107, 203,205,207, 303,305,307	10N0F 10% 400V		15001080
CK117,217,317, **CV**049	1N0F 2K0V		14034870
CK123,223,323	470P0F 10% 3K0V		14006050
CK129,229,329	100N0F 20% 400V		13071240
CL030	1N9F 5% 2K0V	⚠	10559090
CL031	10N0F 3.5% 1K5V		43180300
CL032	20N0F 5% 400V		43388900
CL037	510N0F 5% 250V		10381880
CL041,043	330P0F 20% 1K0V		14035270
CL052	10N0F 5% 400V		14035870
CL146	150P0F 20% 1K0V		30937590
CM148,248,348	470P0F 10% 400V		14002340
CP020	150U0F 385V		43424800
CP022,135,137, 138	470P0F 10% 2K0V		10099390
CP023	2N2F 10% 1K0V		13090980
CP050,053	330P0F 20% 400V		14002220
CP100	1N5F 20% 400V	⚠	10344860
CP101	150P0F 20% 400V	⚠	20738090
CP112	3N3F 5% 630V		10490550
CP201,202	100N0F 20% 275V	⚠	10331520
CP204	1N5F 10% 1K0V		20338740
CP205,206	4N7F 1K0V		10058740
CP209	220U0F 20% 400V		10510680
CP210	22U0F 20% 400V		10114340
CP221	3N3F 20% 1K0V		43324300
CV045,047	4N7F 50% 2K0V		14034420
CV048	820P0F 5% 2K0V		10513370

LL001	DRIVER		10468760
LL008	DSTGDS35	⚠	10641600
LL037	9U0H	⚠	10545340
LP020	SMT57LZ	⚠	10549750
LP070	DRIVER	⚠	60412091
LP201		⚠	10203560
LP250	SMT17	⚠	10534490
LV002			10458460

OTHER PARTS
AUTRES PIECES
SONSTIGE TEILE
ALTRE PARTI
OTRAS PIEZAS

BJ010	CINCH SOCKET PRISE CINCH CINCH-BUCHSE PRESA CINCH TOMA CINCH		10037440
BJ011	SVHS SOCKET PRISE SVHS S-VHS-BUCHSE PRESA SVHS TOMA SVHS		20392900
BK101,201,301	CATHODE RAY TUBE SOCKET SUPPORT TUBE CATHODIQUE BILDROEHRENFASSUNG SUPPORTO TUBO CATODICO SOPORTE T.R.C	⚠	10543870
BQ012	JACK SOCKET PRISE JACK BUCHSE PRESA JACK TOMA JACK		10539510
BS004	CINCH SOCKET PRISE CINCH CHINCH-BUCHSE PRESA CINCH TOMA CINCH		10261740
BX100,200,300	SCART SOCKET PRISE PERITEL EURO-AV-BUCHSE EUROPRESA NORMALIZZATA EUROCONECTOR		10402480
FK101,201,301	63MI0A 250V TIME LAG FUSE 63MI0A 250V FUSIBLE 63MI0A 250V SICHERUNG 63MI0A 250V FUSIBILE 63MI0A 250V FUSIBLE	⚠	25336830
FM102,202,302	63MI0A 250V TIME-LAG FUSE 63MI0A 250V FUSIBLE 63MI0A 250V SICHERUNG 63MI0A 250V FUSIBILE 63MI0A 250V FUSIBLE	⚠	10566870

FP201	2A5T TIME-LAG FUSE 2A5T FUSIBLE TEMPORISE 2A5T THERMISCHE SICHERUNG 2A5T FUSIBILE TEMPORIZZATO 2A5T FUSIBLE TEMPORIZADO	⚠ 10246750
IK007,008,015	IC SUPPORT 2X4 SUPPORT CI 2X4 IC-FASSUNG 2X4 SUPPORTO CI 2X4 SOPORTE CI 2X4	67449100
IR001	IC SUPPORT 4X17 SUPPORT CI 4X17 IC-FASSUNG 4X17 SUPPORTO CI 4X17 SOPORTE CI 4X17	67626900
IR020	IC SUPPORT 2X21 SUPPORT CI 2X21 IC-FASSUNG 2X21 SUPPORTO CI 2X21 SOPORTE CI 2X21	67085500
NH001	CTT5000T UHF/VHF TUNER CTT5000T TETE UHF/VHF CTT5000T UHF/VHF TUNER CTT5000T TUNER UHF/VHF CTT5000T SINTONIZADOR UHF/VHF	20808880
PE130	FOCUS BLOCK 75M0 OHM BLOC FOCUS 75M0 OHM FOCUS BLOCK 75M0 OHM BLOCCO FOCUS 75M0 OHM BLOQUE FOCUS 75M0 OHM	⚠ 15249840
PH200	ON/OFF SWITCH CONTACTEUR MARCHE/ARRET EIN-AUS SCHALTER CONTATTORE ACCESO/SPENTO CONTACTOR MARCHA/PARADA	⚠ 10276500
PT580	SPARK GAP ECLATEUR FUNKENSTRECKE SPINTEROMETRO EXPLOSOR	⚠ 15154190
SK001,002,003, 004,005,006, 007	MICROSWITCH MICRO CONTACTEUR MIKROSCHALTER MICROINTERRUTTORE MICROCONTACTOR	30011100

EQUIPMENT/PRESENTATION EQUIPEMENT/PRESENTATION AUSSTATTUNG/GEHAEUSE PARTI VARIE EQUIPO/PRESENTACION

PROTECTIVE CAP, PLASTIC PROTECTEUR PLASTIQUE ABDECKUNG, KUNSTSTOFF PROTEZIONE IN PLASTICA PROTECCION, PLASTICO	35071000
UPPER BOX EMBALLAGE SUPPERIEURE KARTON OBEN IMBALLAGGIO SUPERIORE EMBALAJE SUPERIOR	35070940
FITTING DOWNER FOND DE CARTON POLSTER UNTEN DISTANZIATORE INFERIORE CALZO INFERIOR	10524970
ADAPTER ANTENNA ADAPTATEUR D'ANTENNE ADAPTER ANTENNE ADATTATORE ANTENNA ADAPTADOR ANTENA	10460690
CABINET ASSY COFFRET EQUIPE GEHAEUSE KPL MOBILE COMPLETO MUEBLE EQUIPADO	25397880
REAR PANEL UPPER DOS SUPERIEUR RUECKWAND OBEN PANNELLO POSTERIORE SUPERIORE TAPA POSTERIOR SUPERIOR	⚠ 25418870
REAR PANEL DOWNER DOS INFERIEUR RUECKWAND UNTEN PANNELLO POSTERIORE INFERIORE TAPA POSTERIOR INFERIOR	⚠ 25418880
FRONT COVER ASSY FACADE EQUIPEE FRONTPLATTE KPL PANNELLO FRONTALE COMPLETO PANEL FRONTAL EQUIPADO	25398880
LOGO THOMSON LOGO THOMSON SCHRIFTZUG THOMSON MARCHIO THOMSON LOGOTIPO THOMSON	25388800
LOUDSPEAKER GRID GRILLE HAUT PARLEUR LAUTSPRECHERGITTER GRIGLIA ALTOPARLANTE REJILLA ALTAVOZ	25398900
COVER JACK SOCKET CACHE PRISE JACK ABDECKUNG BUCHSE COPERCHIO PRESA JACK CUBIERTA TOMA JACK	25298150
UNIT FOCUS SUPPORT SUPPORT BLOC FOCUS BLOCK FOCUS HALTER SUPPORTO GRUPPO FOCUS SOPPORTO BLOQUE FOCUS	⚠ 15143370
IR SUPPORT SUPPORT IR HALTER IR SUPPORTO IR SOPORTE IR	⚠ 15162500
8R OHM 20W LOUDSPEAKER 130MM 8R OHM 20W HAUT PARLEUR 130MM 8R OHM 20W LAUTSPRECHER 130MM 8R OHM 20W ALTOPARLANTE 130MM 8R OHM 20W ALTAVOZ 130MM	10316940
8R OHM 15W LOUDSPEAKER 27X42 8R OHM 15W HAUT PARLEUR 27X42 8R OHM 15W LAUTSPRECHER 27X42 8R OHM 15W ALTOPARLANTE 27X42 8R OHM 15W ALTAVOZ 27X42	10317160
ON/OFF BUTTON TOUCHE MARCHE/ARRET EIN AUS TASTE TASTO ACCESO/SPENTO TECLA MARCHA/PARADA	25398850
BUTTON ASSY ENSEMBLE DE TOUCHES TASTENEINHEIT ASSIEME TASTI CONJUNTO DE TECLAS	25398840
HOLDER CONTROL UNIT SUPPORT DE COMMANDES HALTER BEDIENTEIL SUPPORTO DI COMANDO SOPORTE DE MANDO	25398520
POWER SUPPLY LEAD CORDON D'ALIMENTATION NETZKABEL CAVO DI ALIMENTAZIONE CABLE DE ALIMENTACION	⚠ 10318870
RETAINING RAIL REGLETTE DE MAINTIEN HALTESCHIENE BARRA DI FISSAGGIO LISTON DE SUJECTION	25433730
SCREEN ECRAN BILDSCHIRM SHERMO PANTALLA	25397190
GLASS PROTECTION VITRE DE PROTECTION GLAS SCHULTZ VETRO DI PROTEZIONE CRISTAL DE PROTECCION	25397180
MIRROR MIROIR SPIEGEL SPECCHIO ESPEJO	25394840
ADHESIVE TAPE FOR 10540360 RUBAN ADHESIF 10540360 KLEBEBAND FUR 10540360 NASTRO ADESIVO POR 10540360 CINTA ADHESIVO POR 10540360	15236120
CATHODE RAY TUBE GREEN TUBE CATHODIQUE VERT FARBBILDROEHRE GRUEN TUBO CATODICO VERDE T.R.C VERDE	15339670
CATHODE RAY TUBE BLUE TUBE CATHODIQUE BLEU FARBBILDROEHRE BLAU TUBO CATODICO AZZURO T.R.C AZUL	15339710
CATHODE RAY TUBE RED TUBE CATHODIQUE ROUGE FARBBILDROEHRE ROT TUBO CATODICO ROSSO T.R.C ROJO	15339700
DEFLECTION YOKE DEVIATEUR ABLENKEINHEIT BOBINA DI DEFLESSIONE DEFLECTOR	10540340
FLEXI BOARD (COIL BSVM) CABLE PLATINE (BOBINE BSVM) KABEL PLATTE (SPULE BSVM) CAVO PIASTRA (BOBINA BSVM) CABLE PLATINA (BOBINA BSVM)	10540360
FITTING UPPER DESSUS DE CARTON POLSTER OBEN DISTANZIATORE SUPERIORE CALZO SUPERIOR	10524990
FITTING RIGHT/LEFT COTE DE CARTON POLSTER RECHTS/LINKS DISTANZIATORE DESTRO/SINISTRO CALZO DERECHA/IZQUIERDA	10524980
FOLDING BOX RP52, CPL EMBALLAGE CARTON RP52 COMPLET KARTON RP52, KPL IMBALLAGGIO CARTONE RP52 EMBALAJE CARTON RP52	35070910
RCT4130 REMOTE CONTROL RCT4130 TELECOMMANDE RCT4130 FERNBEDIENUNG RCT4130 TELECOMANDO RCT4130 TELEMANDO	21016730

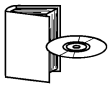

RP19 SERVICE MANUAL EUROPE RP19 DOC TECHNIQUE EUROPE RP19 TECHNISCHE DOKUMENTATION EUROPE RP19 DOCUMENTAZIONE TECNICA EUROPE RP19 DOCUMENTACION TECNICA EUROPE	35064590
RP19 SERVICE MANUAL SUPPLEMENT RP19 DOC TECHNIQUE ADDITIF RP19 TECHNISCHE DOKUMENTATION ZUSATZ RP19 DOCUMENTAZIONE TECNICA ADDITIVO RP19 DOCUMENTACION TECNICA ADITIVO	35089640
CDROM ICC19 VERSION 2 CDROM ICC19 VERSION 2 CDROM ICC19 VERSION 2 CDROM ICC19 VERSION 2 CDROM ICC19 VERSION 2	35075700
52RW64E PARTS LIST 52RW64E LISTA DE PIECES DETACHEES 52RW64E ERSATZTEILLISTE 52RW64E LISTA PARTI DI RICAMBIO 52RW64E LISTA DE PIEZAS DE REPUESTO	35094280
RP C19-S4 UM TH D/F/I/E/GB/NL/S/DK/ PL/CZ/H/SK/RU/GR/P RP C19-S4 NU TH D/F/I/E/GB/NL/S/DK/ PL/CZ/H/SK/RU/GR/P RP C19-S4 BA TH D/F/I/E/GB/NL/S/DK/ PL/CZ/H/SK/RU/GR/P RP C19-S4 IU TH D/F/I/E/GB/NL/S/DK/ PL/CZ/H/SK/RU/GR/P RP C19-S4 IU TH D/F/I/E/GB/NL/S/DK/ PL/CZ/H/SK/RU/GR/P	25424710
52RW64E UM TH D/F/I/E/GB/NL/S/DK/ PL/CZ/H/SK/RU/GR/P 52RW64E NU TH D/F/I/E/GB/NL/S/DK/ PL/CZ/H/SK/RU/GR/P 52RW64E BA TH D/F/I/E/GB/NL/S/DK/ PL/CZ/H/SK/RU/GR/P 52RW64E IU TH D/F/I/E/GB/NL/S/DK/ PL/CZ/H/SK/RU/GR/P 52RW64E IU TH D/F/I/E/GB/NL/S/DK/ PL/CZ/H/SK/RU/GR/P	25392060

The description and characteristics given here are of informative significance only, and non committal. To keep up the high quality of our products, we reserve the right to make any changes or improvement without previous notice. • Les descriptions et caractéristiques figurant sur ce document sont données à titre d'information et non d'engagement. En effet, soucieux de la qualité de nos produits, nous nous réservons le droit d'effectuer, sans préavis, toute modification ou amélioration. • Die Beschreibungen und Daten in dieser Anleitung dienen nur zur Information und sind nicht bindend. Um die Qualität unserer Produkte ständig zu verbessern, behalten wir uns das Recht auf Änderungen vor. • Le descrizioni e le caratteristiche date su questo documento sono fornite a semplice titolo informativo e senza impegno. Ci riserviamo il diritto di eseguire, senza preavviso, qualsiasi modifica o miglioramento. • Las descripciones y características que figuran en este documento se dan a título de información y no de compromiso. En efecto, en bien de la calidad de nuestros productos, nos reservamos el derecho de efectuar, sin previo aviso, cualquier modificación o mejora.

THOMSON multimedia S.A au capital de 12375616000 FF - 46, Quai Alphonse Le Gallo 92648 Boulogne Cedex FRANCE - RCS NANTERRE B 333 773 174